CONTENTS

CHAPTER 39

# SPECIAL MACHINES

## Learning Objectives

- Introduction
- Stepper Motors
- Types of Stepper Motors
- Variable Reluctance Stepper Motors
- Multi-stack VR Stepper Motor
- Permanent-Magnet Stepping Motor
- Hybrid Stepper Motor
- Summary of Stepper Motors
- Permanent-Magnet DC Motor
- Low-inertia DC Motors
- Shell-type Low-intertia DC Motor
- Printed-circuit (Disc) DC Motor
- Permanent-Magnet Synchronous Motors
- Synchros
- Types of Synchros
- Applications of Synchros
- Control Differential Transmitter
- Control Differential Receiver
- Switched Reluctance Motor
- Comparison between VR Stepper Motor and SR Motor
- The Resolver
- Servomotors
- DC Servomotors
- AC Servomotors

Stepper motor

CONTENTS

## 39.1. Introduction

This chapter provides a brief introduction to electrical machines which have special applications. It includes machines whose stator coils are energized by electronically switched currents. The examples are: various types of stepper motors, brushless d.c. motor and switched reluctance motor etc. There is also a brief description of d.c./a.c. servomotors, synchro motors and resolvers. These motors are designed and built primarily for use in feedback control systems.

## 39.2. Stepper Motors

These motors are also called stepping motors or step motors. The name stepper is used because this motor rotates through a fixed angular step in response to each input current pulse received by its controller. In recent years, there has been wide-spread demand of stepping motors because of the explosive growth of the computer industry. Their popularity is due to the fact that they can be controlled directly by computers, microprocessors and programmable controllers.

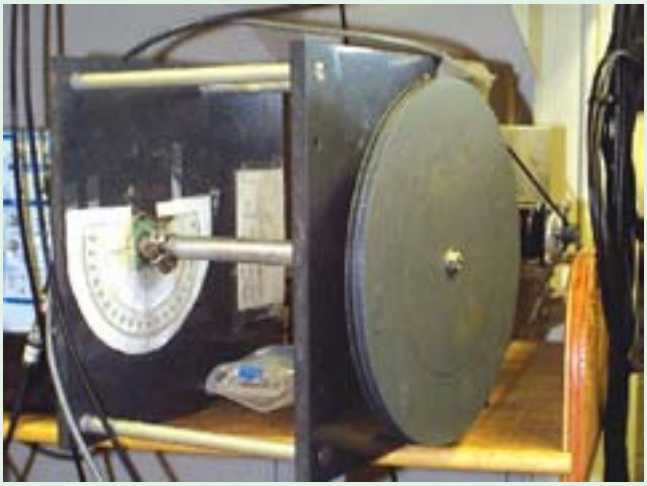

Stepper Motor

As we know, industrial motors are used to convert electric energy into mechanical energy but they cannot be used for precision positioning of an object or precision control of speed without using closed-loop feedback. Stepping motors are ideally suited for situations where either precise positioning or precise speed control or both are required in automation systems.

Apart from stepping motors, other devices used for the above purposes are synchros and resolvers as well as dc/ac servomotors (discussed later).

The unique feature of a stepper motor is that its output shaft rotates in a series of discrete angular intervals or steps, one step being taken each time a command pulse is received. When a definite number of pulses are supplied, the shaft turns through a definite known angle. This fact makes the motor well-suited for open-loop position control because no feedback need be taken from the output shaft.

Such motors develop torques ranging from 1 μN-m (in a tiny wrist watch motor of 3 mm diameter) upto 40 N-m in a motor of 15 cm diameter suitable for machine tool applications. Their power output ranges from about 1 W to a maximum of 2500 W. The only moving part in a stepping motor is its rotor which has no windings, commutator or brushes. This feature makes the motor quite robust and reliable.

### Step Angle

The angle through which the motor shaft rotates for each command pulse is called the step angle β. Smaller the step angle, greater the number of steps per revolution and higher the resolution or accuracy of positioning obtained. The step angles can be as small as 0.72° or as large as 90°. But the most common step sizes are 1.8°, 2.5°, 7.5° and 15°.

The value of step angle can be expressed either in terms of the rotor and stator poles (teeth) $N_r$ and $N_s$ respectively or in terms of the number of stator phases ($m$) and the number of rotor teeth.

$$\beta = \frac{(N_s - N_r)}{N_s \cdot N_r} \times 360^\circ$$

or
$$\beta = \frac{360^\circ}{m\,N_r} = \frac{360^\circ}{\text{No. of stator phases} \times \text{No. of rotor teeth}}$$

For example, if $N_s = 8$ and $N_r = 6$, $\beta = (8 - 6) \times 360 / 8 \times 6 = 15^\circ$

Resolution is given by the number of steps needed to complete one revolution of the rotor shaft. Higher the resolution, greater the accuracy of positioning of objects by the motor

$\therefore$ Resolution = No. of steps / revolution = $360^\circ / \beta$

A stepping motor has the extraordinary ability to operate at very high stepping rates (upto 20,000 steps per second in some motors) and yet to remain fully in synchronism with the command pulses. When the pulse rate is high, the shaft rotation seems continuous. Operation at high speeds is called 'slewing'. When in the slewing range, the motor generally emits an audible whine having a fundamental frequency equal to the stepping rate. If $f$ is the stepping frequency (or pulse rate) in pulses per second (pps) and $\beta$ is the step angle, then motor shaft speed is given by

$$n = \beta \times f / 360 \text{ rps} = \text{pulse frequency resolution}$$

If the stepping rate is increased too quickly, the motor loses synchronism and stops. Same thing happens if when the motor is slewing, command pulses are suddenly stopped instead of being progressively slowed.

Stepping motors are designed to operate for long periods with the rotor held in a fixed position and with rated current flowing in the stator windings. It means that stalling is no problem for such motors whereas for most of the other motors, stalling results in the collapse of back emf ($E_b$) and a very high current which can lead to a quick burn-out.

**Applications :**

Such motors are used for operation control in computer peripherals, textile industry, IC fabrications and robotics etc. Applications requiring incremental motion are typewriters, line printers, tape drives, floppy disk drives, numerically-controlled machine tools, process control systems and $X$-$Y$ plotters. Usually, position information can be obtained simply by keeping count of the pulses sent to the motor thereby eliminating the need for expensive position sensors and feedback controls. Stepper motors also perform countless tasks outside the computer industry. It includes commercial, military and medical applications where these motors perform such functions as mixing, cutting, striking, metering, blending and purging. They also take part in the manufacture of packed food stuffs, commercial end-products and even the production of science fiction movies.

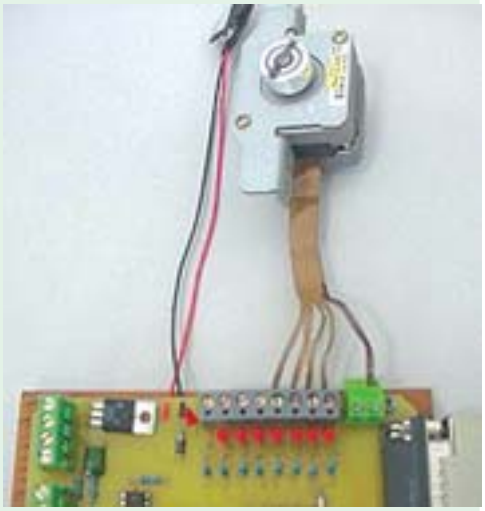

Connecting a stepper motor to the interface

**Example 39.1.** *A hybrid VR stepping motor has 8 main poles which have been castleated to have 5 teeth each. If rotor has 50 teeth, calculate the stepping angle.*

**Solution.** $N_s = 8 \times 5 = 40$; $N_r = 50$

$\therefore$ $\beta = (50 - 40) \times 360 / 50 \times 40 = 1.8^\circ$.

**Example 39.2.** *A stepper motor has a step angle of 2.5°. Determine* **(a)** *resolution* **(b)** *number of steps required for the shaft to make 25 revolutions and* **(c)** *shaft speed, if the stepping frequency is 3600 pps.*

**Solution.** (*a*) Resolution = 360° / β = 360° / 2.5° = 144 steps / revolution.

(*b*) Now, steps / revolution = 144. Hence, steps required for making 25 revolutions = 144 × 25 = 3600.

(*c*) $n = \beta \times f / 360° = 2.5 \times 3600 / 360° = 25$ rps

## 39.3. Types of Stepper Motors

There is a large variety of stepper motors which can be divided into the following three basic categories :

**(*i*) Variable Reluctance Stepper Motor**

It has wound stator poles but the rotor poles are made of a ferromagnetic material as shown in Fig.39.1 (*a*). It can be of the single stack type (Fig.39.2) or multi-stack type (Fig.39.5) which gives smaller step angles. Direction of motor rotation is independent of the polarity of the stator current. It is called variable reluctance motor because the reluctance of the magnetic circuit formed by the rotor and stator teeth varies with the angular position of the rotor.

Permanent magnet stepper motor

**(*ii*) Permanent Magnet Stepper Motor**

It also has wound stator poles but its rotor poles are permanently magnetized. It has a cylindrical rotor as shown in Fig. 39.1 (*b*). Its direction of rotation depends on the polarity of the stator current.

**(*iii*) Hybrid Stepper Motor**

It has wound stator poles and permanently-magnetized rotor poles as shown in Fig.39.1(*c*). It is best suited when small step angles of 1.8°, 2.5° etc. are required.

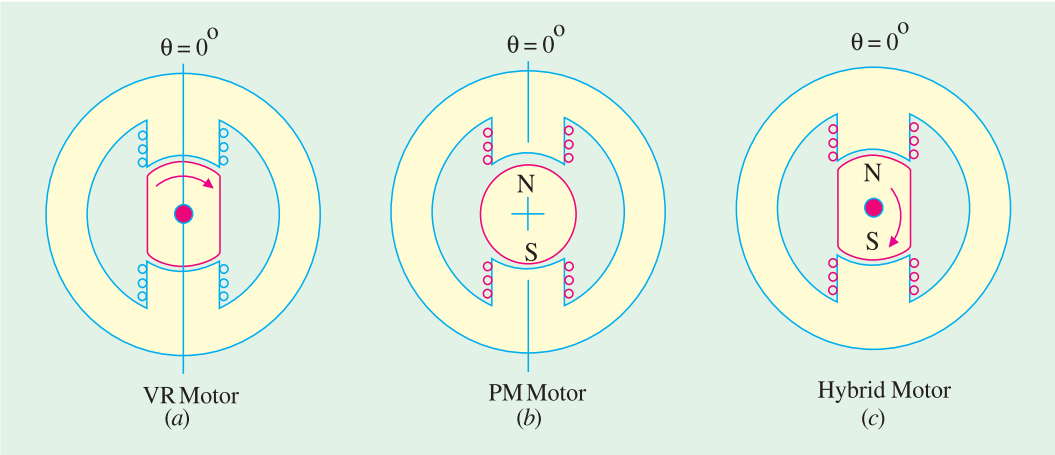


**Fig. 39.1**

As a variable speed machine, *VR* motor is sometime designed as a switched-reluctance motor. Similarly, *PM* stepper motor is also called variable speed brushless dc motor. The hybrid motor combines the features of *VR* stepper motor and *PM* stepper motor. Its stator construction is similar to the single-stack *VR* motor but the rotor is cylindrical and is composed of radially magnetized permanent magnets. A recent type uses a disc rotor which is magnetized axially to give a small stepping angle and low inertia.

## 39.4. Variable Reluctance Stepper Motors

**Construction :** A variable-reluctance motor is constructed from ferromagnetic material with salient poles as shown in Fig. 39.2. The stator is made from a stack of steel laminations and has six equally-spaced projecting poles (or teeth) each wound with an exciting coil. The rotor which may be solid or laminated has four projecting teeth of the same width as the stator teeth. As seen, there are three independent stator circuits or phases *A*, *B* and *C* and each one can be energised by a direct current pulse from the drive circuit (not shown in the figure).

Variable reluctance motor

A simple circuit arrangement for supplying current to the stator coils in proper sequence is shown in Fig. 39.2 (*e*). The six stator coils are connected in 2-coil groups to form three separate circuits called phases. Each phase has its own independent switch. Diametrically opposite pairs of stator coils are connected in series such that when one tooth becomes a *N*-pole, the other one becomes a *S*-pole. Although shown as mechanical switches in Fig. 39.2 (*e*), in actual practice, switching of phase currents is done with the help of solid-state control. When there is no current in the stator coils, the rotor is completely free to rotate. Energising one or more stator coils causes the rotor to step forward (or backward) to a position that forms a path of least reluctance with the magnetized stator teeth. The step angle of this three-phase, four rotor teeth motor is $\beta = 360/4 \times 3 = 30^o$.

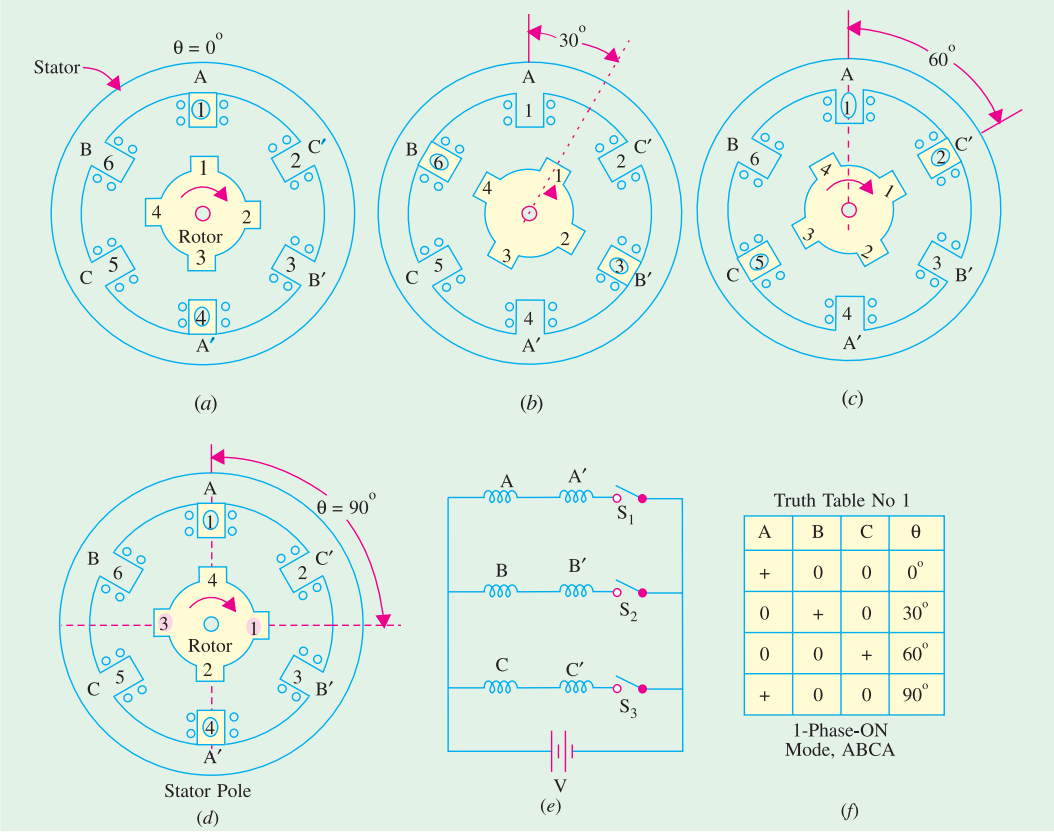


**Fig. 39.2**

**Working.** The motor has following modes of operation :

### (*a*) 1-phase-ON or Full-step Operation

Fig. 39.2 (*a*) shows the position of the rotor when switch $S_1$ has been closed for energising phase *A*. A magnetic field with its axis along the stator poles of phase *A* is created. The rotor is therefore, attracted into a position of minimum reluctance with diametrically opposite rotor teeth 1 and 3 lining up with stator teeth 1 and 4 respectively. Closing $S_2$ and opening $S_1$ energizes phase *B* causing rotor teeth 2 and 4 to align with stator teeth 3 and 6 respectively as shown in Fig. 39.2 (*b*). The rotor rotates through full-step of 30º in the clockwise (CW) direction. Similarly, when $S_3$ is closed after opening $S_2$, phase *C* is energized which causes rotor teeth 1 and 3 to line up with stator teeth 2 and 5 respectively as shown in Fig. 39.2 (*c*). The rotor rotates through an additional angle of 30º in the clockwise (CW) direction. Next if $S_3$ is opened and $S_1$ is closed again, the rotor teeth 2 and 4 will align with stator teeth 4 and 1 respectively thereby making the rotor turn through a further angle of 30º as shown in Fig. 39.2 (*d*). By now the total angle turned is 90º. As each switch is closed and the preceding one opened, the rotor each time rotates through an angle of 30º. By repetitively closing the switches in the sequence 1-2-3-1 and thus energizing stator phases in sequence *ABCA* etc., the rotor will rotate clockwise in 30º steps. If the switch sequence is made 3-2-1-3 which makes phase sequence *CBAC* (or *ACB*), the rotor will rotate anticlockwise. This mode of operation is known as 1-phase-ON mode or full-step operation and is the simplest and widely-used way of making the motor step. The stator phase switching truth table is shown in Fig. 39.2 (*f*). It may be noted that the direction of the stator magnetizing current is not significant because a stator pole of either magnetic polarity will always attract the rotor pole by inducing opposite polarity.

### (*b*) 2-phase-ON Mode

In this mode of operation, two stator phases are excited simultaneously. When phases *A* and *B* are energized together, the rotor experiences torques from both phases and comes to rest at a point mid-way between the two adjacent full-step positions. If the stator phases are switched in the sequence *AB*, *BC*, *CA*, *AB* etc., the motor will take full steps of 30º each (as in the 1-phase-*ON* mode) but its equilibrium positions will be interleaved between the full-step positions. The phase switching truth table for this mode is shown in Fig. 39.3 (*a*).

Truth Table No. 2

| A | B | C | |
|---|---|---|---|
| + | + | 0 | 15° |
| 0 | + | + | 45° |
| + | 0 | + | 75° |
| + | + | 0 | 105° |

2 Phase-ON Mode
AB, BC, CA, AB

Truth Table No. 3

| | A | B | C | | |
|---|---|---|---|---|---|
| A | + | 0 | 0 | 0° | |
| | + | + | 0 | 15° | AB |
| B | 0 | + | 0 | 30° | |
| | 0 | + | + | 45° | BC |
| C | 0 | 0 | + | 65° | |
| | + | 0 | + | 75° | CA |
| A | + | 0 | 0 | 90° | |

Half-Stepping Alternate
1-Phase-On &
2-Phase-on Mode
A, AB, B, BC, C, CA, A

**Fig. 39.3**

The 2-phase-ON mode provides greater holding torque and a much better damped single-stack response than the 1-phase-ON mode of operation.

### (*c*) Half-step Operation

Half-step operation or 'half-stepping' can be obtained by exciting the three phases in the sequence *A*, *AB*, *B*, *BC*, *C* etc. *i.e.* alternately in the 1-phase-ON and 2-phase-ON modes. It is sometime known as 'wave' excitation and it causes the rotor to advance in steps of 15° *i.e.* half the full-step angle. The truth table for the phase pulsing sequence in half-stepping is shown in Fig. 39.3 (*b*).

Half-stepping can be illustrated with the help of Fig. 39.4 where only three successive pulses have been considered. Energizing only phase *A* causes the rotor position shown in Fig. 39.4 (*a*). Energising phases *A* and *B* simultaneously moves the rotor to the position shown in Fig. 39.4 (*b*) where rotor has moved through half a step only. Energising only phase *B* moves the rotor through another half-step as shown in Fig. 39.4 (*c*). With each pulse, the rotor moves 30 / 2 = 15° in the CCW direction.

It will be seen that in half-stepping mode, the step angle is halved thereby doubling the resolution. Moreover, continuous half-stepping produces a smoother shaft rotation.

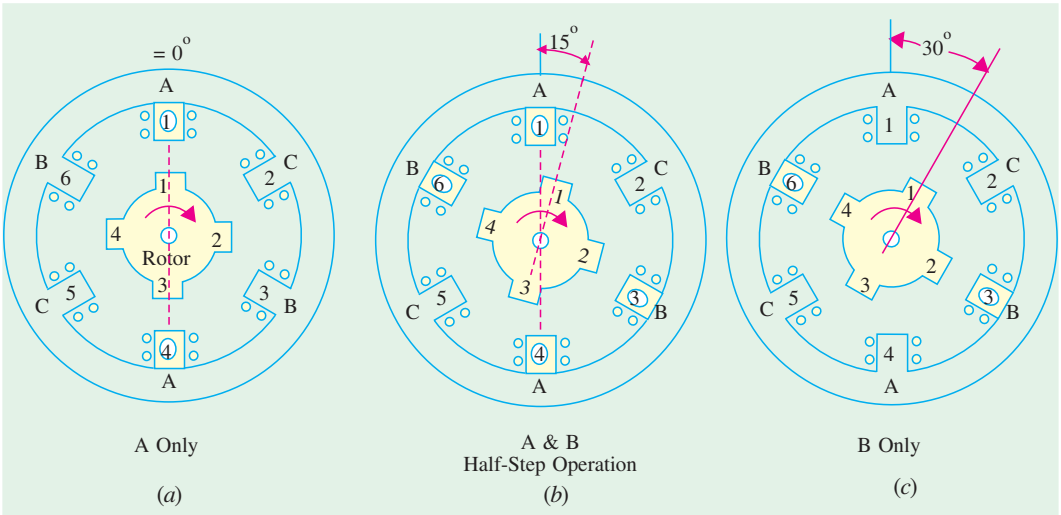


**Fig. 39.4**

### (*d*) Microstepping

It is also known as mini-stepping. It utilizes two phases simultaneously as in 2-phase-*ON* mode but with the two currents deliberately made unequal (unlike in half-stepping where the two phase currents have to be kept equal). The current in phase *A* is held constant while that in phase *B* is increased in very small increments until maximum current is reached. The current in phase *A* is then reduced to zero using the same very small increments. In this way, the resultant step becomes very small and is called a microstep. For example, a *VR* stepper motor with a resolution of 200 steps / rev ($\beta = 1.8°$) can with microstepping have a resolution of 20,000 steps / rev ($\beta = 0.018°$). Stepper motors employing microstepping technique are used in printing and phototypesetting where very fine resolution is called for. As seen, microstepping provides smooth low-speed operation and high resolution.

**Torque.** If $I_a$ is the d.c. current pulse passing through phase *A*, the torque produced by it is given by $T = (1 / 2)\, I_a^2\, dL / d\theta$. *VR* stepper motors have a high (torque / inertia) ratio giving high rates of acceleration and fast response. A possible disadvantage is the absence of detent torque which is necessary to retain the rotor at the step position in the event of a power failure.

## 39.5. Multi-stack VR Stepper Motor

So, far, we have discussed single-stack *VR* motors though multi-stack motors are also available which provide smaller step angles. The multi-stack motor is divided along its axial length into a number of magnetically-isolated sections or stacks which can be excited by a separate winding or phase. Both stator and rotor have the same number of poles. The stators have a common frame while rotors have a common shaft as shown in Fig. 39.5 (*a*) which represents a three-stack *VR* motor. The teeth of all the rotors are perfectly aligned with respect to themselves but the stator teeth of various stacks have a progressive angular displacement as shown in the developed diagram of Fig. 39.5 (*b*) for phase excitation.

Three-stack motors are most common although motors with upto seven stacks and phases are available. They have step angles in the range of 2° to 15°. For example, in a six-stack *VR* motor having 20 rotor teeth, the step angle $\beta = 360° / 6 \times 20 = 3°$.

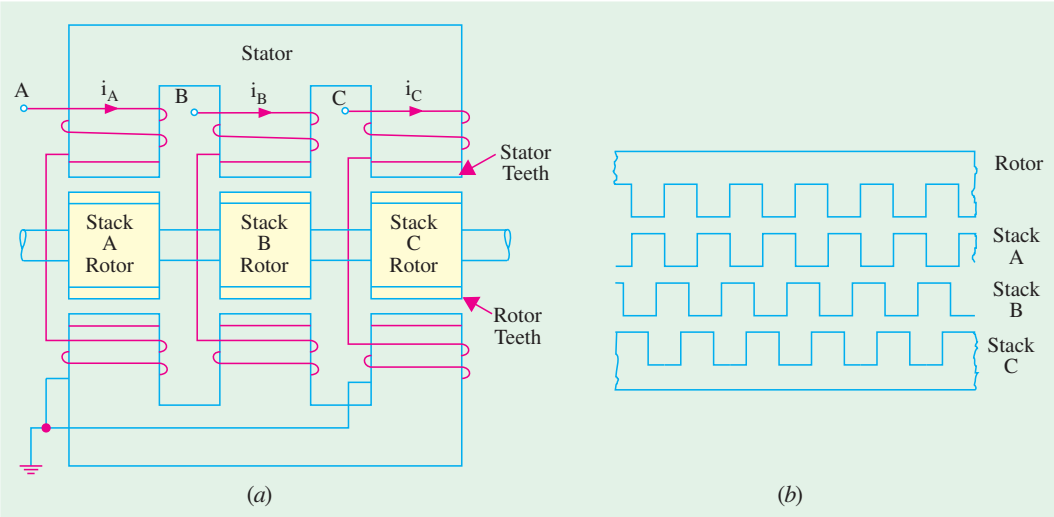


**Fig. 39.5**

## 39.6. Permanent-Magnet Stepping Motor

**(*a*) Construction.** Its stator construction is similar to that of the single-stack *VR* motor discussed above but the rotor is made of a permanent-magnet material like magnetically 'hard' ferrite. As shown in the Fig. 39.6 (*a*), the stator has projecting poles but the rotor is cylindrical and hasradially magnetized permanent magnets. The operating principle of such a motor can be understood with the help of Fig. 39.6 (*a*) where the rotor has two poles and the stator has four poles. Since two stator poles are energized by one winding, the motor has two windings or phases marked *A* and *B*. The step angle of this motor $\beta = 360° / mN_r = 360° / 2 \times 2 = 90°$ or $\beta = (4 - 2) \times 360° / 2 \times 4 = 90°$.

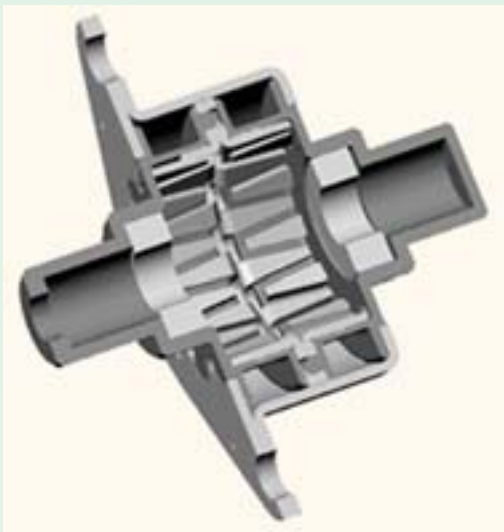

Permanent magnet stepper motor

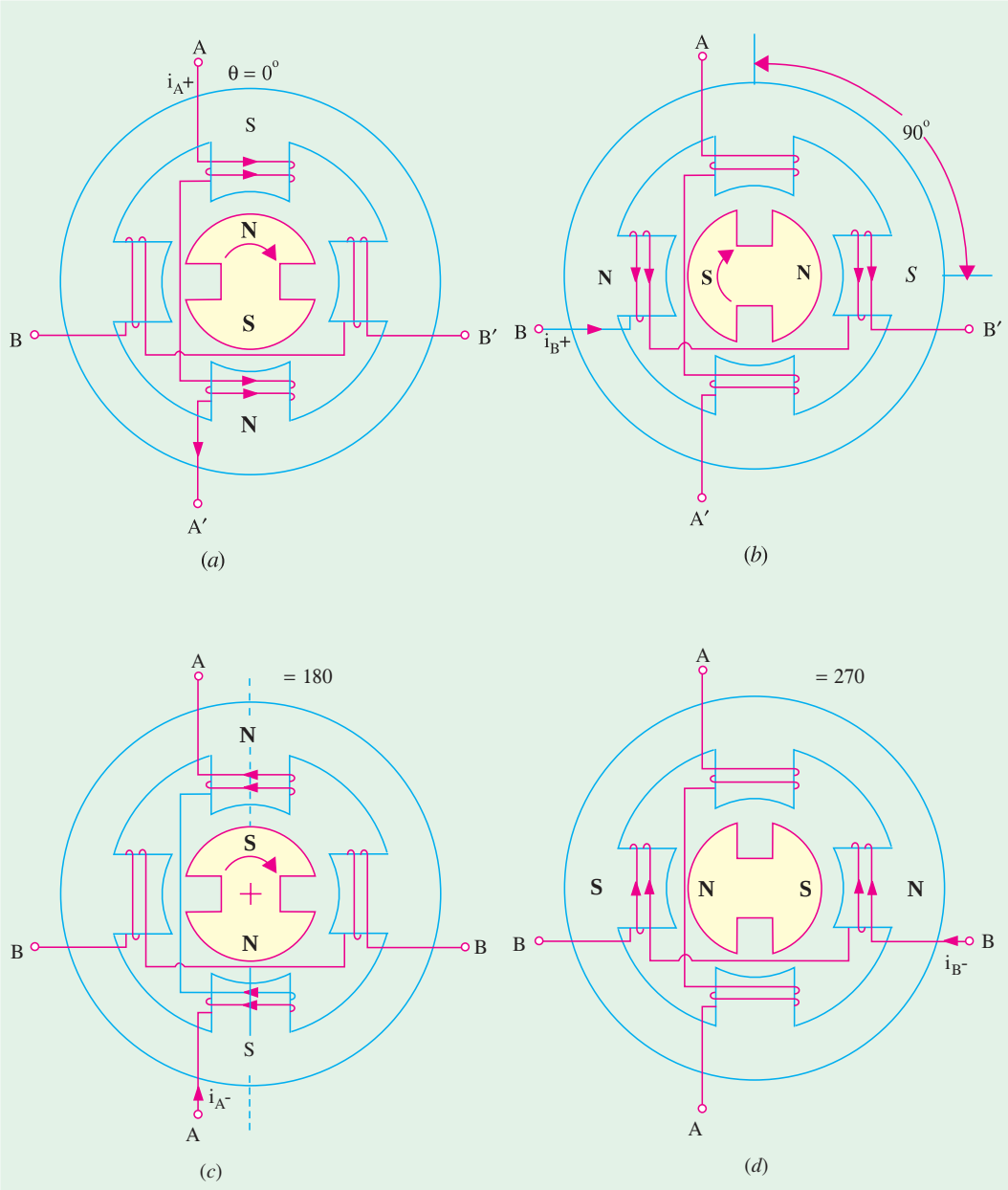


**Fig. 39.6**

***(b)* Working.** When a particular stator phase is energized, the rotor magnetic poles move into alignment with the excited stator poles. The stator windings $A$ and $B$ can be excited with either polarity current ($A^+$ refers to positive current $i_{A^+}$ in the phase $A$ and $A^-$ to ***negative current*** $i_{A^-}$). Fig.39.6 (*a*) shows the condition when phase $A$ is excited with positive current $i_{A^+}$. Here, θ = 0°. If excitation is now switched to phase $B$ as in Fig. 39.6 (*b*), the rotor rotates by a full step of 90° in the clockwise direction. Next, when phase $A$ is excited with negative current $i_{A^-}$, the rotor turns through another 90° in $CW$ direction as shown in Fig. 39.6 (*c*). Similarly, excitation of phase $B$ with $i_{B^-}$ further turns the rotor through another 90° in the same direction as shown in Fig. 39.6 (*d*). After this, excitation of phase $A$ with $i_{A^+}$ makes the rotor turn through one complete revolution of 360°.

Truth Table No. 1

| A | B | |
|---|---|---|
| + | 0 | 0° |
| 0 | + | 90° |
| | 0 | 180° |
| 0 | | 270° |
| + | 0 | 0° |

1-Phase-ON Mode

Truth Table No. 2

| A | B | |
|---|---|---|
| + | + | 45° |
| | + | 135° |
| | | 225° |
| + | | 315° |
| + | + | 45° |

1-Phase-ON Mode

Truth Table No. 3

| A | B | |
|---|---|---|
| + | 0 | 0° |
| + | + | 45° |
| 0 | + | 90° |
| | + | 135° |
| | 0 | 180° |
| | | 225° |
| 0 | | 270° |
| + | | 315° |
| + | 0 | 0° |

Alternate 1-Phase-On & 2-Phase-On Modes

**Fig. 39.7**

It will be noted that in a permanent-magnet stepper motor, the direction of rotation depends on the polarity of the phase currents as tabulated below :

$i_{A^+}$; $i_{B^+}$; $i_{A^-}$; $i_{B^-}$; $i_{A^+}$, .....
$A^+; B^+; A^-; B^-; A^+$; ..... for clockwise rotation

$i_{A^+}$; $i_{B^-}$; $i_{A^-}$; $i_{B^+}$; $i_{A^+}$; .....
$A^+; B^-; A^-; B^+; A^+$; ..... for CCW rotation

Truth tables for three possible current sequences for producing clockwise rotation are given in Fig. 39.7. Table No.1 applies when only one phase is energized at a time in 1-phase-*ON* mode giving step size of 90º. Table No.2 represents 2-phase-*ON* mode when two phases are energised simultaneously. The resulting steps are of the same size but the effective rotor pole positions are midway between the two adjacent full-step positions. Table No.3 represents half-stepping when 1-phase-*ON* and 2-phase-*ON* modes are used alternately. In this case, the step size becomes half of the normal step or one-fourth of the pole-pitch (*i.e.* 90º / 2 = 45º or 180º / 4 = 45º). Microstepping can also be employed which will give further reduced step sizes thereby increasing the resolution.

**(*c*) Advantages and Disadvantages.** Since the permanent magnets of the motor do not require external exciting current, it has a low power requirement but possesses a high detent torque as compared to a *VR* stepper motor. This motor has higher inertia and hence slower acceleration. However, it produces more torque per ampere stator current than a *VR* motor. Since it is difficult to manufacture a small permanent-magnet rotor with large number of poles, the step size in such motors is relatively large ranging from 30º to 90º. However, recently disc rotors have been manufactured which are magnetized axially to give a small step size and low inertia.

**Example 39.3.** *A single-stack, 3-phase VR motor has a step angle of 15º. Find the number of its rotor and stator poles.*

**Solution.** Now, $\beta = 360^o / mN_r$ or $15^o = 360^o / 3 \times N_r$; $\therefore N_r = 8$.

For finding the value of $N_s$, we will use the relation $\beta = (N_s - N_r) \times 360^o / N_s . N_r$

**(*i*) When $N_s > N_r$.** Here, $\beta = (N_s - N_r) \times 360^o / N_s . N_r$

or $15^o = (N_s - 8) \times 360^o / 8 N_s$; $\therefore N_s = \mathbf{12}$

**(*ii*) When $N_s < N_r$.** Here, $15^o = (8 - N_s) \times 360^o / 8 N_s$; $\therefore N_s = \mathbf{6.}$

**Example 39.4.** *A four-stack VR stepper motor has a step angle of 1.8º. Find the number of its rotor and stator teeth.*

**Solution.** A four-stack motor has four phases. Hence, $m = 4$.

$\therefore$ $1.8^o = 360^o / 4 \times N_r$; $\therefore N_r = \mathbf{50.}$

Since in multi-stack motors, rotor teeth equal the stator teeth, hence $N_s = \mathbf{50.}$

## 39.7. Hybrid Stepper Motor

Hybrid stepper motor

**(*a*) Construction.** It combines the features of the variable reluctance and permanent-magnet stepper motors. The rotor consists of a permanent-magnet that is magnetized axially to create a pair of poles marked *N* and *S* in Fig. 39.8 (*b*). Two end-caps are fitted at both ends of this axial magnet. These end-caps consist of equal number of teeth which are magnetized by the respective polarities of the axial magnet. The rotor teeth of one end-cap are offset by a half tooth pitch so that a tooth at one end-cap coincides with a slot at the other. The cross-sectional views perpendicular to the shaft along *X*-*X*′ and *Y*-*Y*′ axes are shown in Fig. 39.8 (*a*) and (*c*) respectively. As seen, the stator consists of four stator poles which are excited by two stator windings in pairs. The rotor has five *N*-poles at one end and five *S*-poles at the other end of the axial magnet. The step angle of such a motor is = $(5 - 4) \times 360^o / 5 \times 4 = 18^o$.

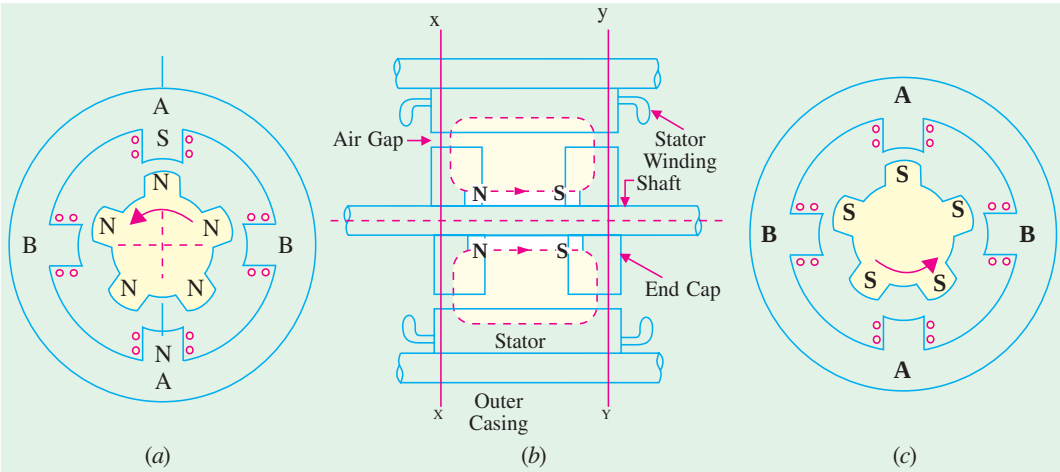


**Fig. 39.8**

**(*b*) Working.** In Fig.39.8 (*a*), phase *A* is shown excited such that the top stator pole is a *S*-pole so that it attracts the top *N*-pole of the rotor and brings it in line with the *A*-*A*′ axis. To turn the rotor,

Truth Table

| A | B | |
|---|---|---|
| + | 0 | 0° |
| 0 | + | 18° |
| – | 0 | 36° |
| 0 | – | 54° |
| + | 0 | 72° |

1-Phase ON
Full-Step Mode

(*a*)

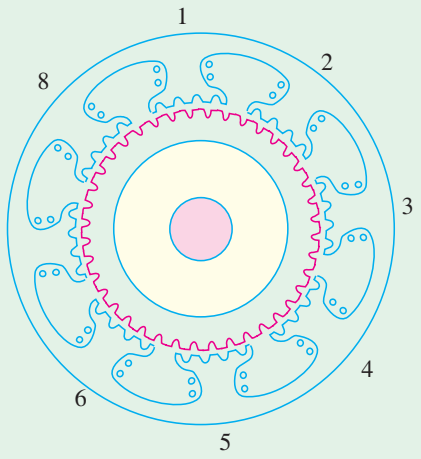


(*b*)

**Fig. 39.9**

phase *A* is denergized and phase *B* is excited positively. The rotor will turn in the CCW direction by a full step of 18°.

Next, phase *A* and *B* are energized negatively one after the other to produce further rotations of 18° each in the same direction. The truth table is shown in Fig. 39.9 (*a*). For producing clockwise rotation, the phase sequence should be $A^+; B^-; A^-; B^+; A^+$ etc.

Practical hybrid stepping motors are built with more rotor poles than shown in Fig. 39.9 in order to give higher angular resolution. Hence, the stator poles are often slotted or castleated to increase the number of stator teeth. As shown in Fig. 39.9 (*b*), each of the eight stator poles has been alloted or castleated into five smaller poles making $N_s = 8 \times 5 = 40°$. If rotor has 50 teeth, then step angle = $(50 - 40) \times 360° / 50 \times 40 = 1.8°$. Step angle can also be decreased (and hence resolution increased) by having more than two stacks on the rotor.

This motor achieves small step sizes easily and with a simpler magnet structure whereas a purely *PM* motor requires a multiple permanent-magnet. As compared to *VR* motor, hybrid motor requires less excitation to achieve a given torque. However, like a *PM* motor, this motor also develops good detent torque provided by the permanent-magnet flux. This torque holds the rotor stationary while the power is switched off. This fact is quite helpful because the motor can be left overnight without fear of its being accidentally moved to a new position.

## 39.8. Summary of Stepper Motors

**1.** A stepper motor can be looked upon as a digital electromagnetic device where each pulse input results in a discrete output *i.e.* a definite angle of shaft rotation. It is ideally-suited for open-loop operation because by keeping a count of the number of input pulses, it is possible to know the exact position of the rotor shaft.

**2.** In a *VR* motor, excitation of the stator phases gives rise to a torque in a direction which minimizes the magnetic circuit reluctance. The reluctance torque depends on the square of the phase current and its direction is independent of the polarity of the phase current. A *VR* motor can be a single-stack or multi-stack motor. The step angle $\beta = 360° / mN_r$ where $N_r$ is the number of rotor teeth and $m$ is the number of phases in the single-stack motor or the number of stacks in the multi-stack motor.

**3.** A permanent-magnet stepper motor has a permanently-magnetized cylindrical rotor. The direction of the torque produced depends on the polarity of the stator current.

**4.** A hybrid motor combines the features of *VR* and *PM* stepper motors. The direction of its torque also depends on the polarity of the stator current. Its step angle $\beta = 360° / mN_r$.

**5.** In the 1-phase *ON* mode of excitation, the rotor moves by one full-step for each change of excitation. In the 2-phase-*ON* mode, the rotor moves in full steps although it comes to rest at a point midway between the two adjacent full-step positions.

**6.** Half-stepping can be achieved by alternating between the 1-phase-*ON* and 2-phase-*ON* modes. Step angle is reduced by half.

**7.** Microstepping is obtained by deliberately making two phase currents unequal in the 2-phase-*ON* mode.

### Tutorial Problems 39.1

1. A stepper motor has a step angle of 1.8º. What number should be loaded into the encoder of its drive system if it is desired to turn the shaft ten complete revolutions ? **[2000]**
2. Calculate the step angle of a single-stack, 4-phase, 8/6-pole *VR* stepper motor. What is its resolution ? **[15º; 24 steps/rev]**
3. A stepper motor has a step angle of 1.8º and is driven at 4000 pps. Determine (*a*) resolution (*b*) motor speed (*c*) number of pulses required to rotate the shaft through 54º. **[(*a*) 200 steps/rev (*b*) 1200 rpm (*c*) 30]**
4. Calculate the pulse rate required to obtain a rotor speed of 2400 rpm for a stepper motor having a resolution of 200 steps/rev. **[4000 pps]**
5. A stepper motor has a resolution of 500 steps/rev in the 1-phase-*ON* mode of operation. If it is operated in half-step mode, determine (*a*) resolution (*b*) number of steps required to turn the rotor through 72º. **[(*a*) 1000 steps/rev (*b*) 200]**
6. What is the required resolution for a stepper motor that is to operate at a pulse frequency of 6000 pps and a travel 180º in 0.025 s ? **[300 steps/rev]**

## 39.9. Permanent-Magnet DC Motor

A permanent-magnet d.c. (PMDC) motor is similar to an ordinary d.c. shunt motor except that its field is provided by permanent magnets instead of salient-pole wound-field structure. Fig. 39.10 (*a*) shows 2-pole PMDC motor whereas Fig. 39.10 (*b*) shows a 4-pole wound-field d.c. motor for comparison purposes.

Permanent magnet DC - motor

### (*a*) Construction

As shown in Fig. 39.10 (*a*), the permanent magnets of the PMDC motor are supported by a cylindrical steel stator which also serves as a return path for the magnetic flux. The rotor (*i.e.* armature) has winding slots, commutator segments and brushes as in conventional d.c. machines.

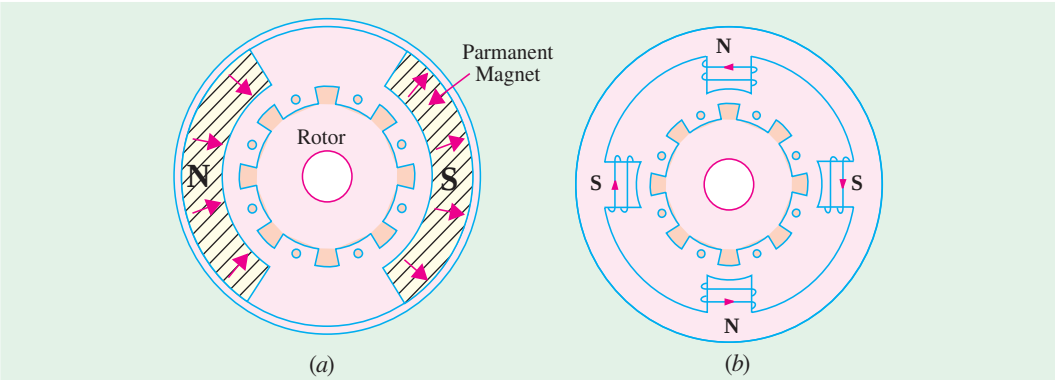


**Fig. 39.10**

There are three types of permanent magnets used for such motors. The materials used have residual flux density and high coercivity.

(*i*) Alnico magnets – They are used in motors having ratings in the range of 1 kW to 150 kW.

(*ii*) Ceramic (ferrite) magnets – They are much economical in fractional kilowatt motors.

(*iii*) Rare-earth magnets – Made of samarium cobalt and neodymium iron cobalt which have the highest energy product. Such magnetic materials are costly but are best economic choice for small as well as large motors.

Another form of the stator construction is the one in which permanent-magnet material is cast in the form of a continuous ring instead of in two pieces as shown in Fig. 39.10 (*a*).

### (*b*) Working

Most of these motors usually run on 6 V, 12 V or 24 V dc supply obtained either from batteries or rectified alternating current. In such motors, torque is produced by interaction between the axial current-carrying rotor conductors and the magnetic flux produced by the permanent magnets.

### (*c*) Performance

Fig. 39.11 shows some typical performance curves for such a motor. Its speed-torque curve is a straight line which makes this motor ideal for a servomotor. Moreover, input current increases linearly with load torque. The efficiency of such motors is higher as compared to wound-field dc motors because, in their case, there is no field Cu loss.

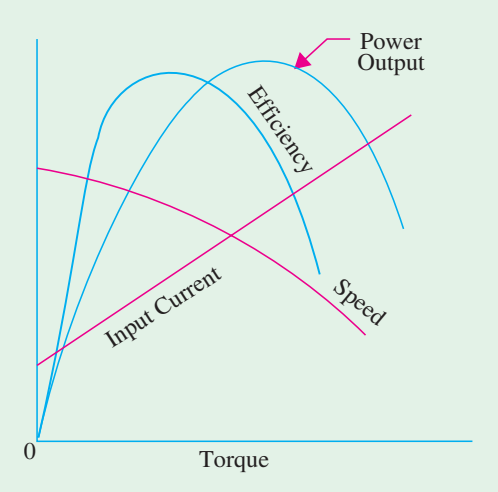


Fig. 39.11

### (*d*) Speed Control

Since flux remains constant, speed of a PMDC motor cannot be controlled by using Flux Control Method (Art 33.2). The only way to control its speed is to vary the armature voltage with the help of an armature rheostat (Art 33.2) or electronically by using *x*-choppers. Consequently, such motors are found in systems where speed control below base speed only is required.

### (*e*) Advantages

(*i*) In very small ratings, use of permanent-magnet excitation results in lower manufacturing cost.

(*ii*) In many cases a PMDC motor is smaller in size than a wound-field d.c. motor of equal power rating.

(*iii*) Since field excitation current is not required, the efficiency of these motors is generally higher than that of the wound-field motors.

(*iv*) Low-voltage PMDC motors produce less air noise.

(*v*) When designed for low-voltage (12 V or less) these motors produced very little radio and TV interference.

### (*f*) Disadvantages

(*i*) Since their magnetic field is active at all times even when motor is not being used, these motors are made totally enclosed to prevent their magnets from collecting magnetic junk from neighbourhood. Hence, as compared to wound-field motors, their temperature

tends to be higher. However, it may not be much of a disadvantage in situations where motor is used for short intervals.

**(*ii*)** A more serious disadvantage is that the permanent magnets can be demagnetized by armature reaction mmf causing the motor to become inoperative. Demagnetization can result from **(*a*)** improper design **(*b*)** excessive armature current caused by a fault or transient or improper connection in the armature circuit **(*c*)** improper brush shift and **(*d*)** temperature effects.

**(*g*) Applications**

**(*i*)** Small, 12-V PMDC motors are used for driving automobile heater and air conditioner blowers, windshield wipers, windows, fans and radio antennas etc. They are also used for electric fuel pumps, marine engine starters, wheelchairs and cordless power tools.

**(*ii*)** Toy industry uses millions of such motors which are also used in other appliances such as the toothbrush, food mixer, ice crusher, portable vacuum cleaner and shoe polisher and also in portable electric tools such as drills, saber saws and hedge trimmers etc.

## 39.10. Low-inertia DC Motors

These motors are so designed as to make their armature mass very low. This permits them to start, stop and change direction and speed very quickly making them suitable for instrumentation applications. The two common types of low-inertia motors are **(*i*)** shell-type motor and **(*ii*)** printed-circuit (PC) motor.

## 39.11. Shell-type Low-intertia DC Motor

Its armature is made up of flat aluminium or copper coils bonded together to form a hollow cylinder as shown in Fig. 39.12. This hollow cylinder is not attached physically to its iron core which is stationary and is located inside the shell-type rotor. Since iron does not form part of the rotor, the rotor inertia is very small.

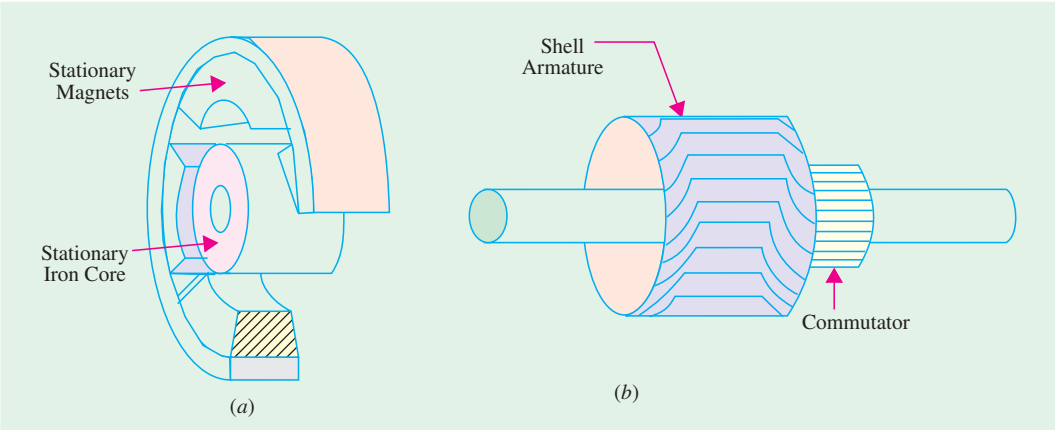


**Fig. 39.12**

## 39.12. Printed-circuit (Disc) DC Motor

### (*a*) Constructional Details

It is a low-voltage dc motor which has its armature (rotor) winding and commutator printed on a thin disk of non-magnetic insulating material. This disk-shaped armature contains no iron and etched-copper conductors are printed on its both sides. It uses permanent magnets to produce the necessary

magnetic field. The magnetic circuit is completed through the flux-return plate which also supports the brushes. Fig. 39.13 shows an 8-pole motor having wave-wound armature. Brushes mounted in an axial direction bear directly on the inner parts of the armature conductors which thus serve as a commutator. Since the number of armature conductors is very large, the torque produced is uniform even at low speeds. Typical sizes of these motors are in the fractional and subfractional horsepower ranges. In many applications, acceleration from zero to a few thousand rpm can be obtained within 10 ms.

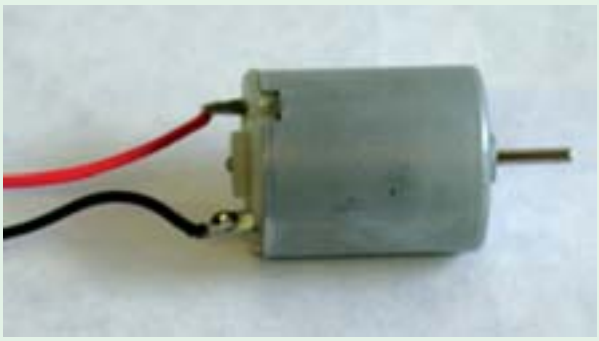

Low voltage DC motor

### (*b*) Speed Control

The speed can be controlled by varying either the applied armature voltage or current. Because of their high efficiency, fan cooling is not required in many applications. The motor brushes require periodic inspection and replacement. The rotor disk which carries the conductors and commutator, being very thin, has a limited life. Hence, it requires replacing after some time.

### (*c*) Main Features

The main features of this motor are **(*i*)** very low-inertia (*ii*) high overload current capability **(*iii*)** linear speed-torque characteristic **(*iv*)** smooth torque down to near-zero speed **(*v*)** very suitable for direct-drive control applications **(*vi*)** high torque/inertia ratio.

### (*d*) Advantages

**(*i*)** High efficiency **(*ii*)** Simplified armature construction **(*iii*)** Being of low-voltage design, produces minimum of radio and TV interference.

### (*e*) Disadvantages

**(*i*)** Restricted to low voltages only **(*ii*)** Short armature life **(*iii*)** Suited for intermittent duty cycle only because motor overheats in a very short time since there is no iron to absorb excess heat **(*v*)** liable to burn out if stalled or operated with the wrong supply voltage.

### (*f*) Applications

These low-inertia motors have been developed specifically to provide high performance characteristics when used in direct-drive control applications. Examples are :

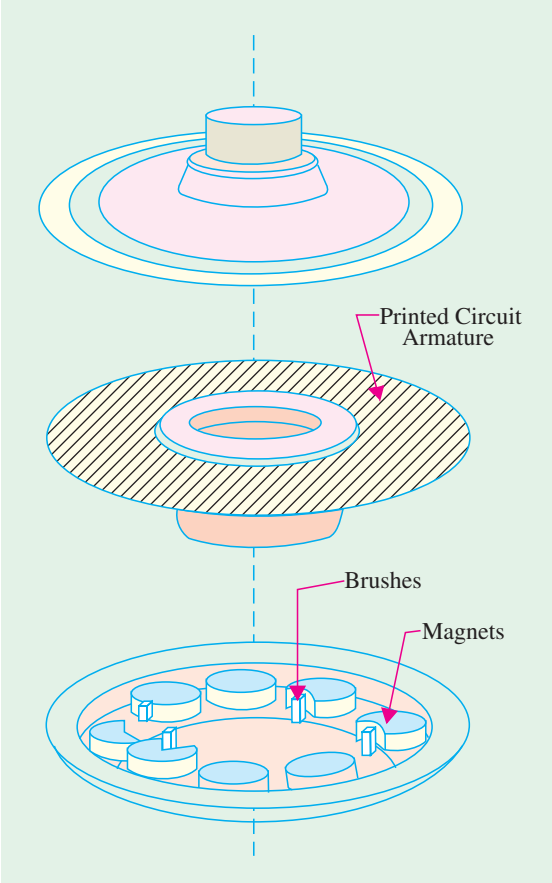


Fig. 39.13

**(*i*)** high speed paper tape readers **(*ii*)** oscillographs **(*iii*)** *X-Y* recorders **(*iv*)** layer winders **(*v*)** point-to-point tool positioners *i.e.* as positioning servomotors **(*vi*)** with in-built optical position encoder, it competes with stepping motor **(*vii*)** in high rating is being manufactured for heavy-duty drives such as lawn mowers and battery-driven vehicles etc.

## 39.13. Permanent-Magnet Synchronous Motors

### (*a*) Construction and Performance

Such motors have a cage rotor having rare-earth permanent magnets instead of a wound field. Such a motor starts like an induction motor when fed from a fixed-frequency supply. A typical 2-pole and 4-pole surface-mounted versions of the rotor are shown in Fig. 39.14. Since no d.c. supply is needed for exciting the rotor, it can be made more robust and reliable. These motors have outputs ranging from about 100 W upto 100 kW. The maximum synchronous torque is designed to be around

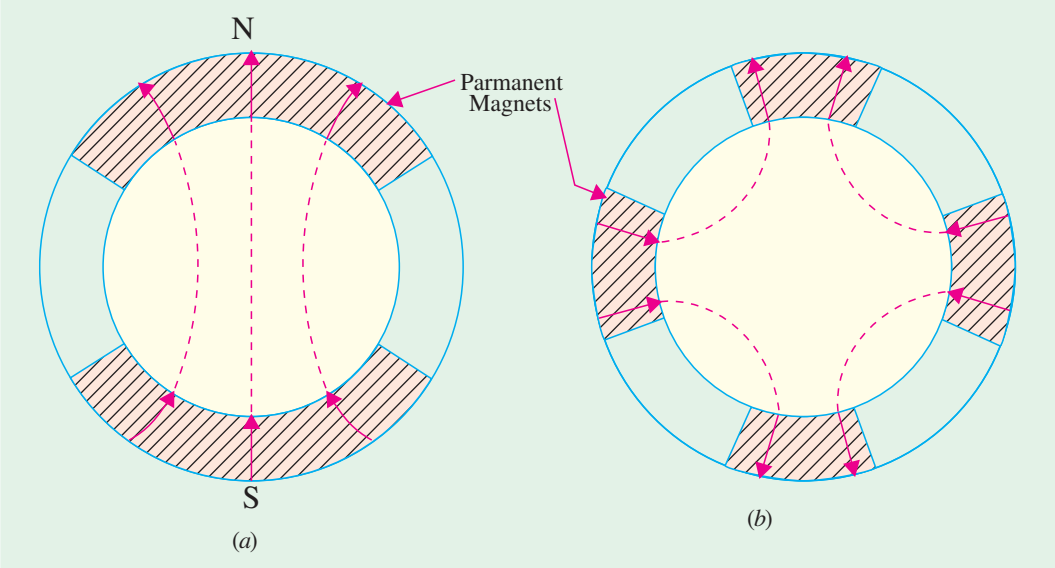


**Fig. 39.14**

150 per cent of the rated torque. If loaded beyond this point, the motor loses synchronism and will run either as an induction motor or stall.

These motors are usually designed for direct-on-line (DOL) starting. The efficiency and power factor of the permanent-magnet excited synchronous motors are each 5 to 10 points better than their reluctance motor counterparts.

### (*b*) Advantages

Since there are no brushes or slip-rings, there is no sparking. Also, brush maintenance is eliminated. Such motors can pull into synchronism with inertia loads of many times their rotor inertia.

### (*c*) Applications

These motors are used where precise speed must be maintained to ensure a consistent product. With a constant load, the motor maintains a constant speed.

Permanent magnetic synchronous motor

Hence, these motors are used for synthetic-fibre drawing where constant speeds are absolutely essential.

## 39.14. Synchros

It is a general name for self-synchronizing machines which, when electrically energized and electrically interconnected, exert torques which cause two mechanically independent shafts either to run in synchronism or to make the rotor of one unit follow the rotor position of the other. They are also known by the trade names of selsyns and autosyns. Synchros, in fact, are small cylindrical motors varying in diameter from 1.5 cm to 10 cm depending on their power output. They are low-torque devices and are widely used in control systems for transmitting shaft position information or for making two or more shafts to run in synchronism. If a large device like a robot arm is to be positioned, synchros will not work. Usually, a servomotor is needed for a higher torque.

## 39.15. Types of Synchros

There are many types of synchros but the four basic types used for position and error-voltage applications are as under :

**(*i*)** Control Transmitter (denoted by CX) – earlier called generator **(*ii*)** Control Receiver (CR) – earlier called motor **(*iii*)** Control-Transformer (CT) and **(*iv*)** Control Differential (CD). It may be further subdivided into control differential transmitter (CDX) and control differential receiver (CDR).

All of these synchros are single-phase units except the control differential which is of three-phase construction.

Synchros

**(*a*) Constructional Features**

**1. Control Transmitter**

Its constructional details are shown in Fig. 39.15 (*a*). It has a three-phase stator winding similar to that of a three-phase synchronous generator. The rotor is of the projecting-pole type using dumbell construction and has a single-phase winding. When a single-phase ac voltage is applied to the rotor through a pair of slip rings, it produces an alternating flux field along the axes of the rotor. This alternating flux induces three unbalanced single phase/voltage in the three stator windings by transformer action. If the rotor is aligned with the axis of the stator winding 2, flux linkage of this stator winding is maximum and this rotor position is defined as the electrical zero. In Fig. 39.15 (*b*), the rotor axis is displaced from the electrical zero by an angle displaced 120° apart.

**(*b*) Control Receiver (CR)**

Its construction is essentially the same as that of the control transmitter shown in Fig. 39.15 (*a*). It has three stator windings and a single-phase salient-pole rotor. However, unlike a *CX*, a *CR* has a mechanical viscous damper on the shaft which permits *CR* rotor to respond without overshooting its mark. In normal use, both the rotor and stator windings are excited with single-phase currents. When the field of the rotor conductors interacts with the field of the stator conductors, a torque is developed which produces rotation.

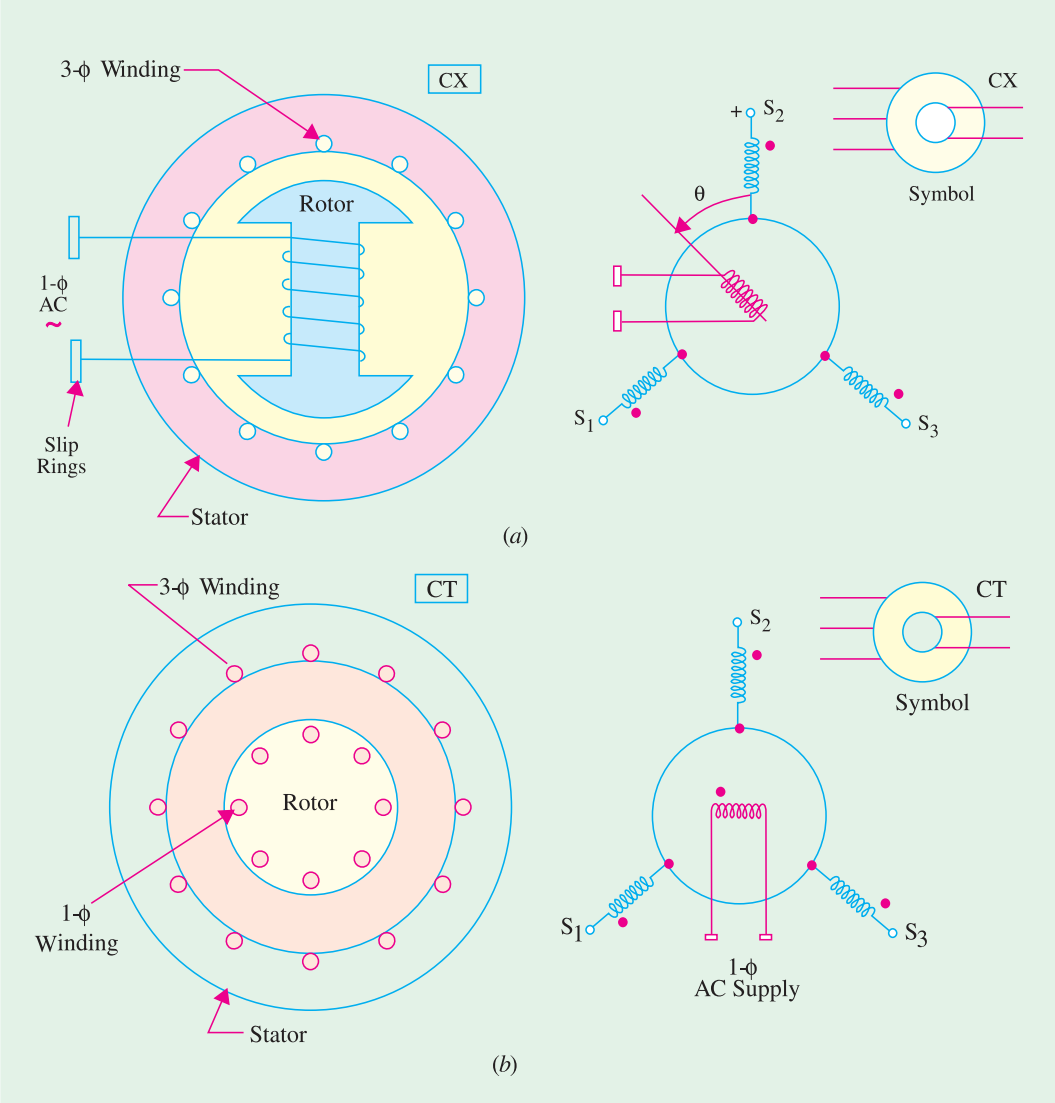


**Fig. 39.15**

### (*c*) Control Transformer (CT)

As shown in Fig. 39.15 (*b*) its stator has a three-phase winding whereas the cylindrical rotor has a single-phase winding. In this case, the electrical zero is defined as that position of the rotor that makes the flux linkage with winding 2 of the stator zero. This rotor position has been shown in Fig. 39.15 (*b*) and is different from that of a control transmitter.

### (*d*) Control Differential (CD)

The differential synchro has a balanced three-phase distributed winding in both the stator and the rotor. Moreover, it has a cylindrical rotor as shown in Fig. 39.16 (*a*). Although three-phase windings are involved, it must be kept in mind that these units deal solely with single-phase voltages. The three winding voltages are not polyphase voltages. Normally, the three-phase voltages are identical in magnitude but are separated in phase by 120º. In synchros, these voltages are in phase but differ in magnitude because of their physical orientation.

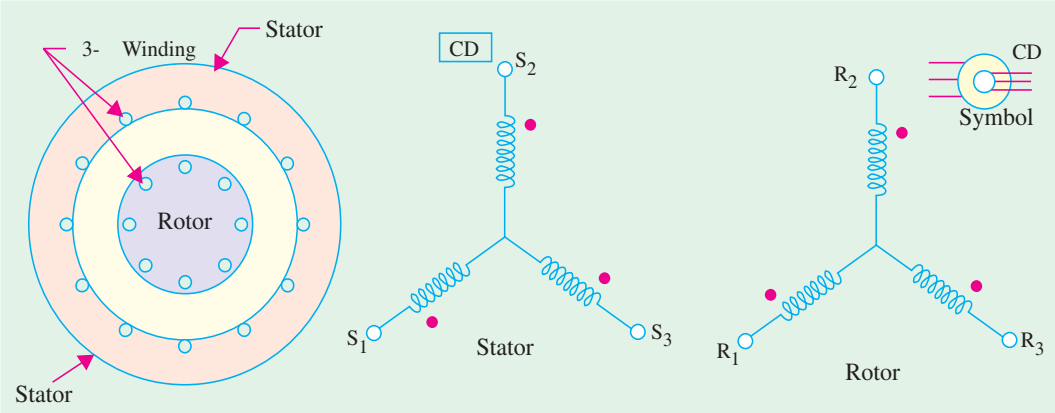


Fig. 39.16

### (*e*) Voltage Relations

Consider the control transmitter shown in Fig. 39.17. Suppose that its rotor winding is excited by a single-phase sinusoidal ac voltage of rms value $E_r$ and that rotor is held fast in its displaced position from the electrical zero. If $K$ = stator turns / rotor turns, the rms voltage induced in the stator winding is $E = KE_r$. However, if we assume $K = 1$, then $E = E_r$.

The rms value of the induced emf in stator winding 2 when the rotor displacement is '$a$' is given by

$$E_{2s} = E_r \cos \alpha.$$

Since the axis of the stator winding 1 is located 120° ahead of the axis of winding 2, the rms value of the induced emf in this winding is

$$E_{1s} = E_r \cos (\alpha - 120^\circ).$$

In the same way since winding 3 is located behind the axis of winding 2 by 120°, the expression for the induced emf in winding 3 becomes

$$E_{3s} = E_r \cos (\alpha + 120^\circ).$$

We can also find the values of terminal induced voltages as

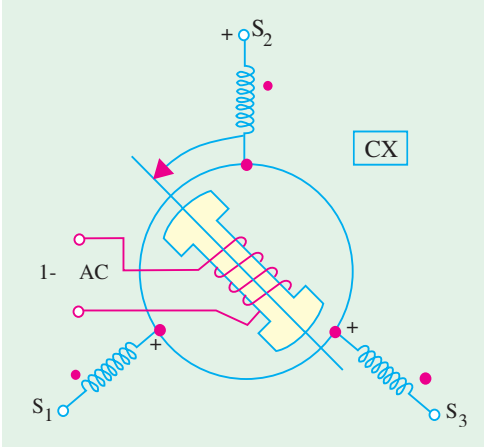


Fig. 39.17

$$E_{12} = E_{1s} + E_{s2} = E_{1s} - E_{2s}$$
$$= E_r \cos \alpha \cos 120^\circ + E_r \sin \alpha \sin 120^\circ - E_r \cos \alpha$$
$$= E_r \left( -\frac{3}{2} \cos \alpha + \frac{\sqrt{3}}{2} \sin \alpha \right)$$
$$= \sqrt{3}\, E_r \left( -\frac{1}{2} \cos \alpha + \frac{1}{2} \sin \alpha \right)$$
$$= \sqrt{3}\, E_r \cos (\alpha - 150^\circ)$$
$$E_{23} = E_{2s} + E_{s3} = E_{2s} - E_{3s}$$
$$= E_r \left( \frac{3}{2} \cos \alpha + \frac{\sqrt{3}}{2} \sin \alpha \right) = \sqrt{3}\, E_r \left( \frac{\sqrt{3}}{2} \cos \alpha + \frac{1}{2} \sin \alpha \right) = \sqrt{3}\, E_r \cos (\alpha - 30^\circ)$$
$$E_{31} = E_{3s} + E_{s1} = E_{3s} - E_{1s}$$
$$= E_r \cos (\alpha + 120^\circ) - E_r \cos (\alpha - 120^\circ)$$
$$= -\sqrt{3}\, E_r \sin \alpha = \sqrt{3}\, E_r \cos (\alpha + 90^\circ)$$

**Example 39.5.** *The rotor of a control transmitter (CX) is excited by a single-phase ac voltage of rms value 20 V. Find the value of $E_{1s}$, $E_{2s}$ and $E_{3s}$ for rotor angle $\alpha = +40^o$ and $-40^o$. Assume the stator/rotor turn ratio as unity. Also, find the values of terminal voltages when $\alpha = +30^o$.*

**Solution.** Since $K = 1$, the voltage relations derived in will be used.

**(a)** $\alpha = +40^o$

$E_{2s} = E_r \cos\alpha = 20 \cos 40^o = 15.3$ V

$E_{1s} = E_r \cos(\alpha - 120^o) = 20 \cos(40^o - 120^o) =$ **3.5 V**

$E_{3s} = E_r \cos(\alpha + 120^o) = 20 \cos 160^o =$ **– 18.8 V**

**(b)** $\alpha = -40^o$

$E_{2s} = 20 \cos(-40^o) = 15.3$ V

$E_{1s} = 20 \cos(-40^o - 120^o) = 20 \cos(-160^o) = -18.8$ V

$E_{3s} = 20 \cos(-40^o + 120^o) = 20 \cos 80^o =$ **3.5 V**

**(c)** $E_{12} = \sqrt{3} \times 20 \times \cos(30^o - 150^o) = -17.3$ V

$E_{23} = \sqrt{3}\, E_r \cos(\alpha - 30^o) = \sqrt{3}\, E_r \cos(30^o - 30^o) = 34.6$ V

$E_{31} = \sqrt{3}\, E_r \cos(\alpha + 90^o) = \sqrt{3} \times 20 \times \cos(30^o + 90^o) =$ **– 17.3 V**

## 39.16. Applications of Synchros

The synchros are extensively used in servomechanism for torque transmission, error detection and for adding and subtracting rotary angles. We will consider these applications one by one.

### (a) Torque Transmission

Synchros are used to transmit torque over a long distance without the use of a rigid mechanical connection. Fig. 39.18 represents an arrangement for maintaining alignment of two distantly-located shafts. The arrangement requires a control transmitter (CX) and a control receiver (CR) which acts as a torque receiver. As *CX* is rotated by an angle α, *CR* also rotates through the same angle α. As shown, the stator windings of the two synchros are connected together and their rotors are connected to the same single-phase ac supply.

**Working.** Let us suppose that *CX* rotor is displaced by an angle α and switch $SW_1$ is closed to energize the rotor winding. The rotor winding flux will induce an unbalanced set of three single-phase voltages (in time phase with the rotor voltage) in the *CX* stator phase windings which will circulate currents in the *CR* stator windings. These currents produce the *CR* stator flux field whose axis is fixed by the angle α. If the *CR* rotor winding is now energized by closing switch $SW_2$, its flux field will interact with the flux field of the stator winding and thereby produce a torque. This torque will rotate the freely-moving *CR* rotor to a position which exactly corresponds with the *CT* rotor *i.e.* it will be displaced by the same angle α as shown in Fig. 39.18. It should be noted that if the two rotors are in the same relative positions, the stator voltages in the two synchros will be exactly equal and opposite. Hence, there will be no current flow in the two stator windings and so no torque will be produced and the system will achieve equilibrium. If now, the transmitter rotor angle changes to a new value, then new set of voltages would be induced in the transmitter stator windings which will again drive currents through the receiver stator windings. Hence, necessary torque will be produced which will turn the *CR* rotor through an angle corresponding to that of the *CT* rotor. That is why the transmitter rotor is called the master and the receiver rotor as the slave, because it follows its master. It is worth noting that this master-slave relationship is reversible because when the receiver rotor is displaced through a certain angle, it causes the transmitter rotor to turn through the same angle.

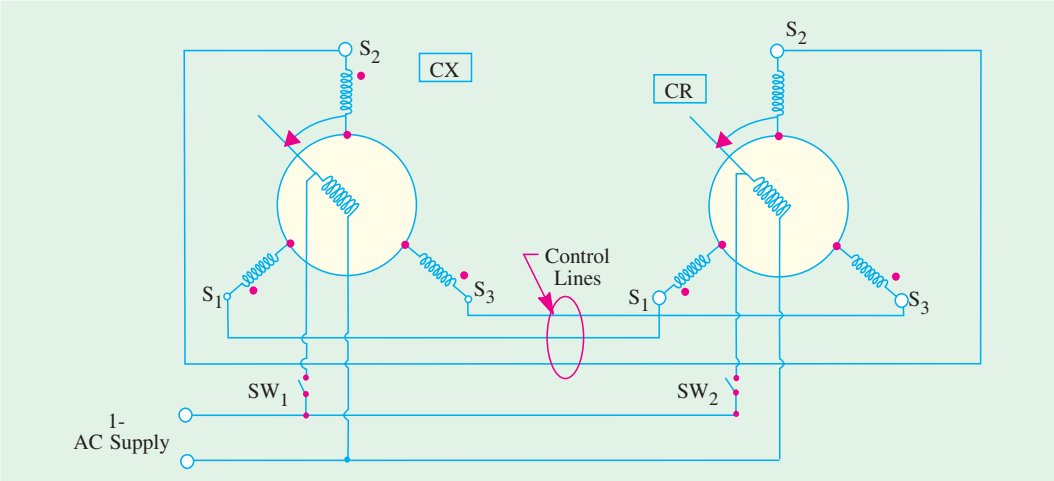


Fig. 39.18

### (*b*) Error Detection

Synchros are also used for error detection in a servo control system. In this case, a command in the form of a mechanical displacement of the *CX* rotor is converted to an electrical voltage which appears at the *CT* rotor winding terminals which can be further amplified by an amplifier.

For this purpose, we require a *CX* synchro and a *CT* synchro as shown in Fig. 39.19. Only the *CX* rotor is energized from the single-phase ac voltage supply which produces an alternating air-gap flux field. This time-varying flux field induces voltages in the stator windings whose values for $\alpha = 30^o$ are as indicated in the Fig. 39.19. The *CX* stator voltages supply magnetizing currents in the *CT* stator

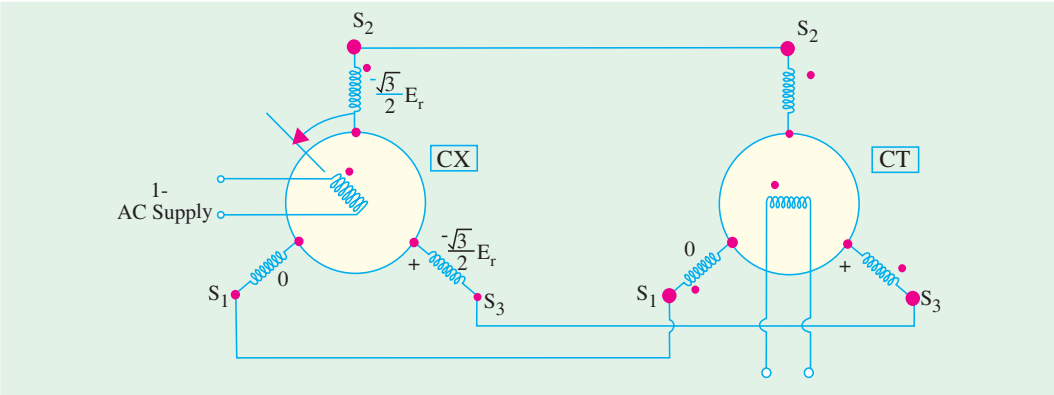


Fig. 39.19

windings which, in turn, create an alternating flux field in their own air-gap. The values of the *CT* stator phase currents are such that the air-gap flux produced by them induces voltages that are equal and opposite to those existing in the *CX* stator. Hence, the direction of the resultant flux produced by the *CX* stator phase currents is forced to take a position which is exactly identical to that of the rotor axis of the *CT*.

If the *CT* rotor is assumed to be held fast in its electrical zero position as shown in Fig.39.19, then the rms voltage induced in the rotor is given by $E = E_{max} \sin \alpha$, where $E_{max}$ is the maximum voltage induced by the *CT* air-gap flux when coupling with the rotor windings is maximum and $\alpha$ is the displacement angle of the *CT* rotor.

In general, the value of the rms voltage induced in the *CT* rotor winding when the displacement of the *CX* rotor is $\alpha_x$ and that of the *CT* rotor is $\alpha_T$ is given by

$$E = E_{max} \sin(\alpha_x - \alpha_T)$$

## 39.17. Control Differential Transmitter

It can be used to produce a rotation equal to the sum of difference of the rotations of two shafts. The arrangement for this purpose is shown in Fig. 39.20 (*a*). Here, a CDX is coupled to a control transmitter on one side and a control receiver on the other. The *CX* and *CR* rotor windings are energized from the same single-phase voltage supply.

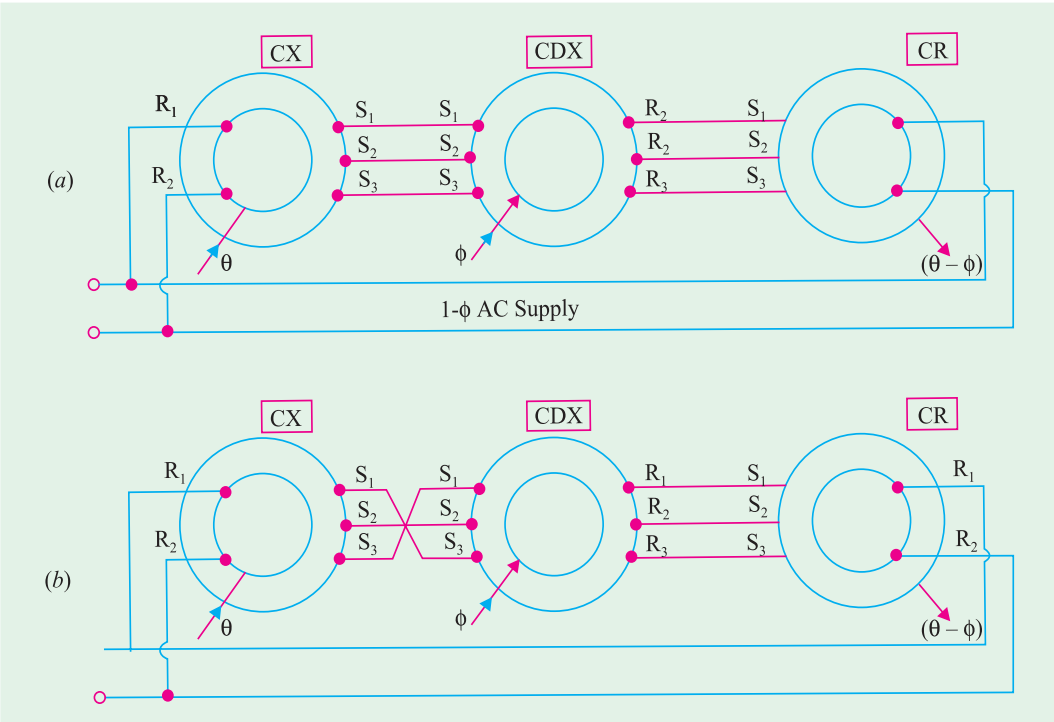


**Fig. 39.20**

It has two inputs : Mechanical θ and Electrical ϕ and the output is Machnical (θ – ϕ). The mechanical input (θ) to *CX* is converted and applied to the *CDX* stator. With a rotor input (ϕ), the electrical output of the *CDX* is applied to the *CR* stator which provides the mechanical output (θ – ϕ).

As shown in Fig. 39.20 (*b*), if any two stator connections between *CX* and *CDX* are transposed, the electrical input from *CX* to *CDX* becomes –θ, hence the output becomes (–θ – ϕ) = – (θ + ϕ).

## 39.18. Control Differential Receiver

In construction, it is similar to a *CDX* but it accepts two electrical input angles and provide the difference angle as a mechanical output (Fig. 39.21).

The arrangement consists of two control transmitters coupled to a *CDR*. The two control transmitters provide inputs to the CDX, one (θ) to the stator and the other (ϕ) to the rotor. The *CDX* output is the difference of the two inputs *i.e.* (θ – ϕ).

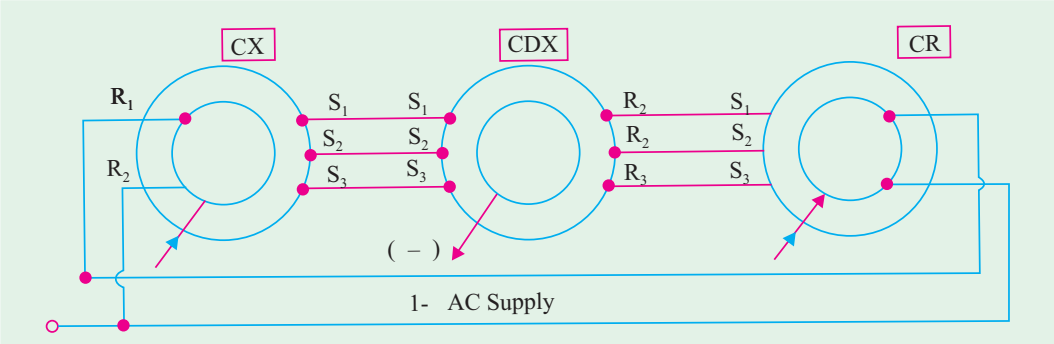


Fig. 39.21

## 39.19. Switched Reluctance Motor

The switched reluctance (SR) motor operates on the same basic principle as a variable reluctance stepper motor (Art. 39.4).

### (*a*) Construction

Unlike a conventional synchronous motor, both the rotor and stator of a SR motor have salient poles as shown in Fig. 39.22. This doubly-salient arrangement is very effective for electromagnetic energy conversion.

The stator carries coils on each pole, the coils on opposite poles being connected in series. The eight stator coils shown in Figure are grouped to form four phases which are independently energized from a four-phase converter. The laminated rotor has no windings or magnets and is, therefore cheap to manufacture and extremely robust. The motor shown in Fig. 39.22 has eight stator poles and six rotor poles which is a widely-used arrangement although other pole combinations (like 6/4 poles) are used to suit different applications.

### (*b*) Working

Usual arrangement is to energize stator coils sequentially with a single pulse of current at high speed. However, at starting and low speed, a current-chopper type control is used to limit the coil current.

Switched reluctance motor

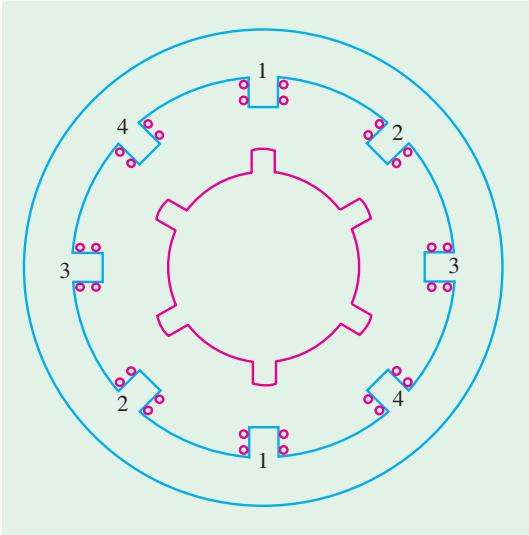


Fig. 39.22

The motor rotates in the anticlockwise direction when the stator phases are energized in the sequence 1, 2, 3, 4 and in clockwise direction when energized in the sequence 1, 4, 3, 2. When the stator coils are energized, the nearest pair of rotor poles is pulled into alignment with the appropriate stator poles by reluctance torque.

Closed-loop control is essential to optimize the switching angles of the applied coil voltages. The stator phases are switched by signals derived from a shaft-mounted rotor position detectors such as Hall-effect devices or optical sensors Fig. (39.23). This causes the behaviour of the SR motor to resemble that of a dc motor.

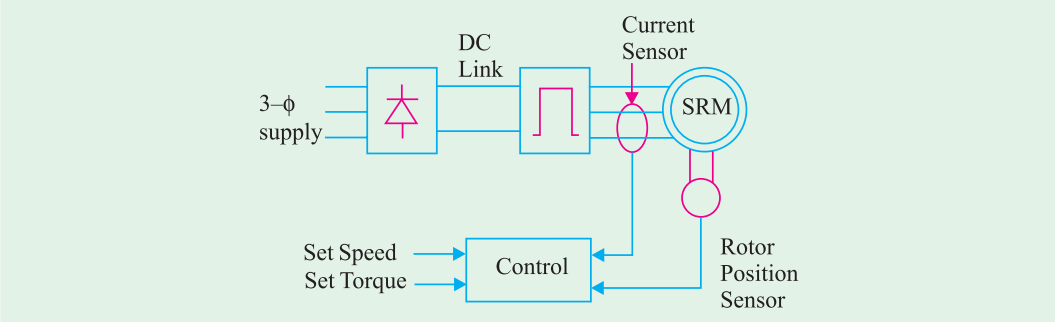


**Fig. 39.23**

### (*c*) Advantages and Disadvantages

Although the newest arrival on the drives scene, the SR motor offers the following advantages:

**(*i*)** higher efficiency **(*ii*)** more power per unit weight and volume **(*iii*)** very robust because rotor has no windings or slip rings **(*iv*)** can run at very high speed (upto 30,000 rpm) in hazardous atmospheres **(*v*)** has versatile and flexible drive features and **(*vi*)** four-quadrant operation is possible with appropriate drive circuitry.

However, the drawbacks are that it is **(*i*)** relatively unproven **(*ii*)** noisy and **(*iii*)** not well-suited for smooth torque production.

### (*d*) Applications

Even though the SR technology is still in its infancy, it has been successfully applied to a wide range of applications such as **(*i*)** general purpose industrial drives **(*ii*)** traction **(*iii*)** domestic appliances like food processors, vacuum cleaners and washing machines etc., and **(*iv*)** office and business equipment.

## 39.20. Comparison between *VR* Stepper Motor and SR Motor

| *VR Stepper Motor* | *SR Motor* |
|---|---|
| 1. It rotates in steps. | It is meant for continuous rotation. |
| 2. It is designed first and foremost for open-loop operation. | Closed-loop control is essential for its optimal working. |
| 3. Its rotor poles are made of ferromagnetic material. | Its rotor poles are also made of ferromagnetic material. |
| 4. It is capable of half-step operation and microstepping. | It is not designed for this purpose. |
| 5. Has low power rating. | Has power ratings upto 75 kW (100 hp). |
| 6. Has lower efficiency. | Has higher overall efficiency. |

## 39.21. The Resolver

In many ways, it is similar to a synchro but differs from it in the following respects : ***(i)*** Electrical displacement between stator windings is 90° and not 120° ***(ii)*** It has two stator windings and two rotor windings (Fig. 39.24) ***(iii)*** Its input can be either to the stator or to the rotor ***(iv)*** They are usually not used as followers because their output voltage is put to further use.

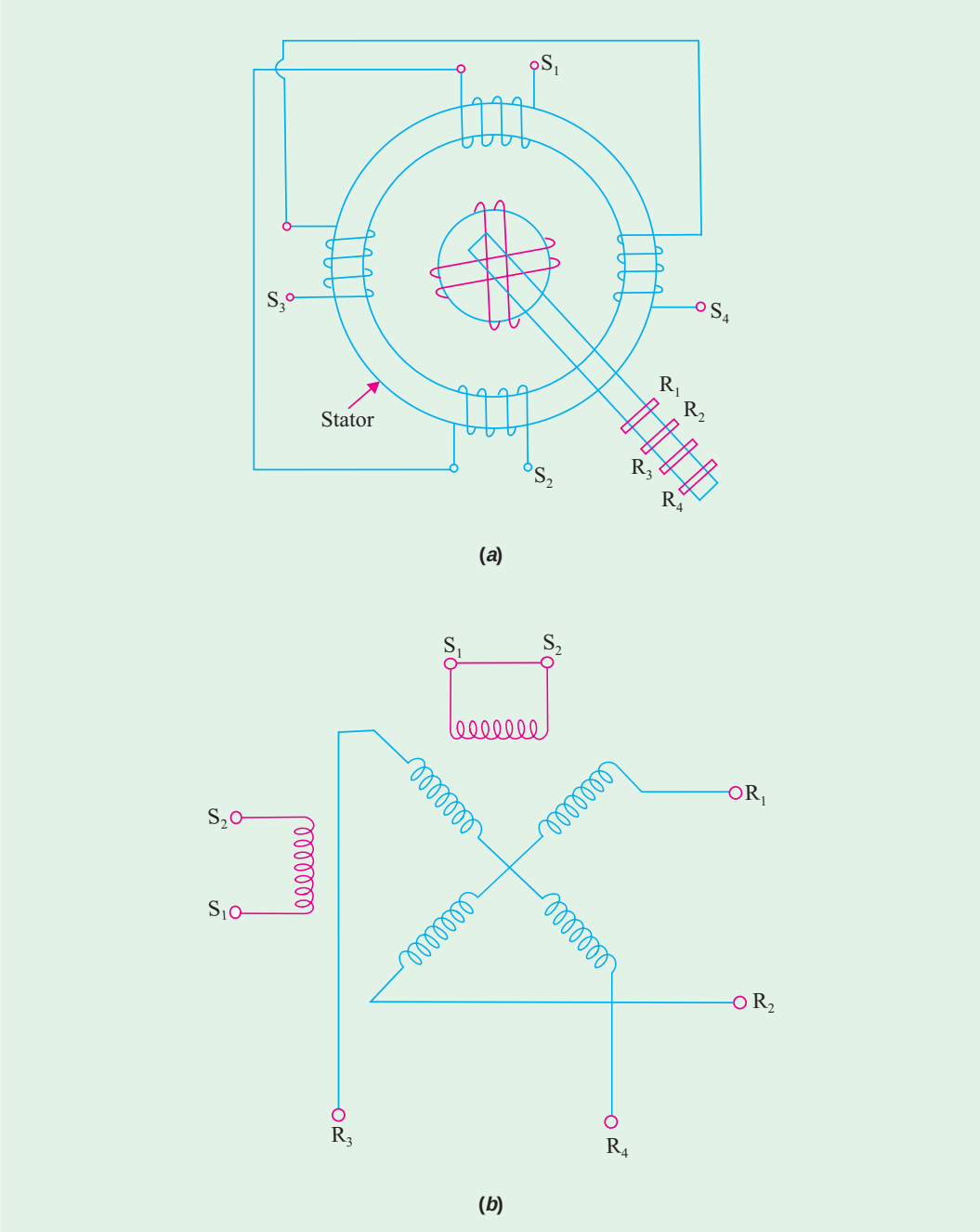


**Fig. 39.24**

### (*a*) Construction

The main constructional features and the symbol for a resolver are shown in Fig. 39.24. There are two stator windings which are wound 90° apart. In most applications, only one stator winding is used, the other being short-circuited. The two rotor winding connections are brought out through slip rings and brushes.

### (*b*) Applications

Resolvers find many applications in navigation and height determination as shown in Fig. 39.25 (*a*) and (*c*) where Fig. 39.25 (*b*) provides the key.

### (*i*) Navigation Application

As shown in Fig. 39.25 (*a*), the purpose is to determine the distance $D$ to the destination. Suppose the range $R$ to a base station as found by a radar ranging device is 369 km. The angle θ is also determined directly. If the amplifier scale is 4.5 V per 100 km, the range would be represented by $369 \times (4.5 / 100) = 16.6$ V. Further suppose that angle θ is found to be 52.5°. Now, set the resolver at 52.5° and apply 16.6 V to rotor terminals $R_3 R_4$. The voltage which appears at terminals $S_1 S_2$ represents $D$. If we assume $K$ = stator turns / rotor turns = 1, the voltage available at $S_1 S_2$ will be = 16.6 / cos 52.5° = 16.6 / 0.6088 = 27.3 V. Since 4.5 V represents 100 km, 27.3 V represents $27.3 \times 100 / 4.5 =$ 607 km.

### (*ii*) Height Determination

Suppose the height $H$ of a building is to be found. First of all, the oblique distance $D$ to the top of the building is found by a range finder. Let $D$ = 210 m and the scale of the amplifier to the resolver stator be 9 V per 100 m. The equivalent voltage is $9 \times 210 / 100 = 18.9$ V. This voltage is applied to stator terminals is $S_1 S_2$ of the resolver. Suppose the angle θ read from the resolver scale is 61.3°. The height of the building is given in the form of voltage which appears across the rotor terminals $R_1 R_2$. Assuming stator / rotor turn ratio as unity and the same amplifier ratio for the rotor output, the voltage across $R_1 R_2 = 18.9 \times \sin 61.3° = 16.6$ V. Hence, $H = 16.6 \times 100 / 9 = 184$ m. It would be seen that in using the resolver, there is no need to go through trigonometric calculations because the answers come out directly.

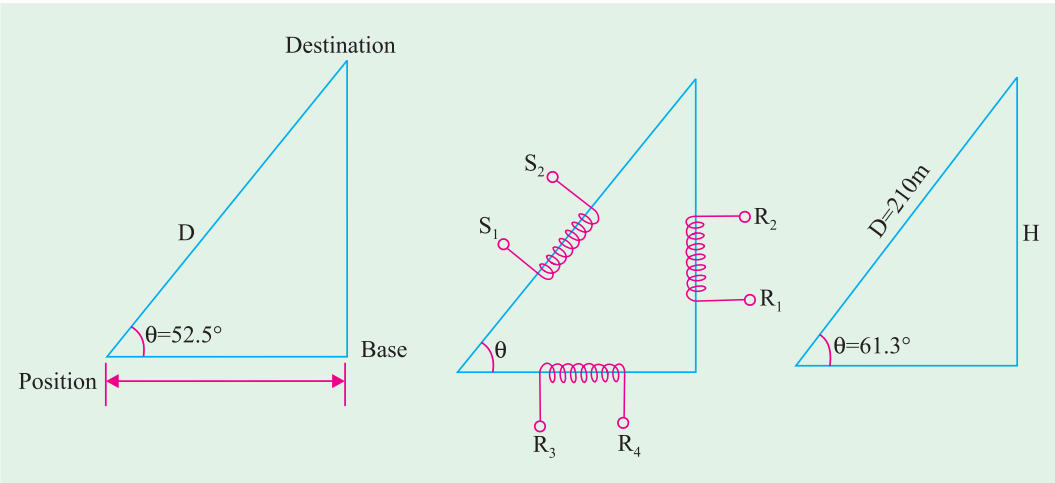


**Fig. 39.25**

## 39.22. Servomotors

They are also called control motors and have high-torque capabilities. Unlike large industrial motors, they are not used for continuous energy conversion but only for precise speed and precise position control at high torques. Of course, their basic principle of operation is the same as that of other electromagnetic motors. However, their construction, design and mode of operation are different. Their power ratings vary from a fraction of a watt upto a few 100 W. Due to their low-inertia, they have high speed of response. That is why they are smaller in diameter but longer in length. They generally operate at vary low speeds or sometimes zero speed. They find wide applications in radar, tracking and guidance systems, process controllers, computers and machine tools. Both dc and a.c. (2-phase and 3-phase) servomotors are used at present.

Servomotors differ in application capabilities from large industrial motors in the following respects :

1. They produce high torque at all speeds including zero speed.
2. They are capable of holding a static (*i.e.* no motion) position.
3. They do not overheat at standstill or lower speeds.
4. Due to low-inertia, they are able to reverse directions quickly.
5. They are able to accelerate and deaccelerate quickly.
6. They are able to return to a given position time after time without any drift.

These motors look like the usual electric motors. Their main difference from industrial motors is that more electric wires come out of them for power as well as for control. The servomotor wires go to a controller and not to the electrical line through contactors. Usually, a tachometer (speed indicating device) is mechanically connected to the motor shaft. Sometimes, blower or fans may also be attached for motor cooling at low speeds.

DC servo motor

## 39.23. DC Servomotors

These motors are either separately-excited dc motors or permanent-magnet dc motors. The schematic diagram of a separately-excited d.c. motor alongwith its armature and field MMFs and torque/speed characteristics is shown in Fig. 39.26. The speed of d.c. servomotors is normally controlled by varying the armature voltage. Their armature is deliberately designed to have large resistance so that torque-speed characteristics are linear and have a large negative slope as shown in Fig. 39.26 (*c*). The negative slope serves the purpose of providing the viscous damping for the servo drive system.

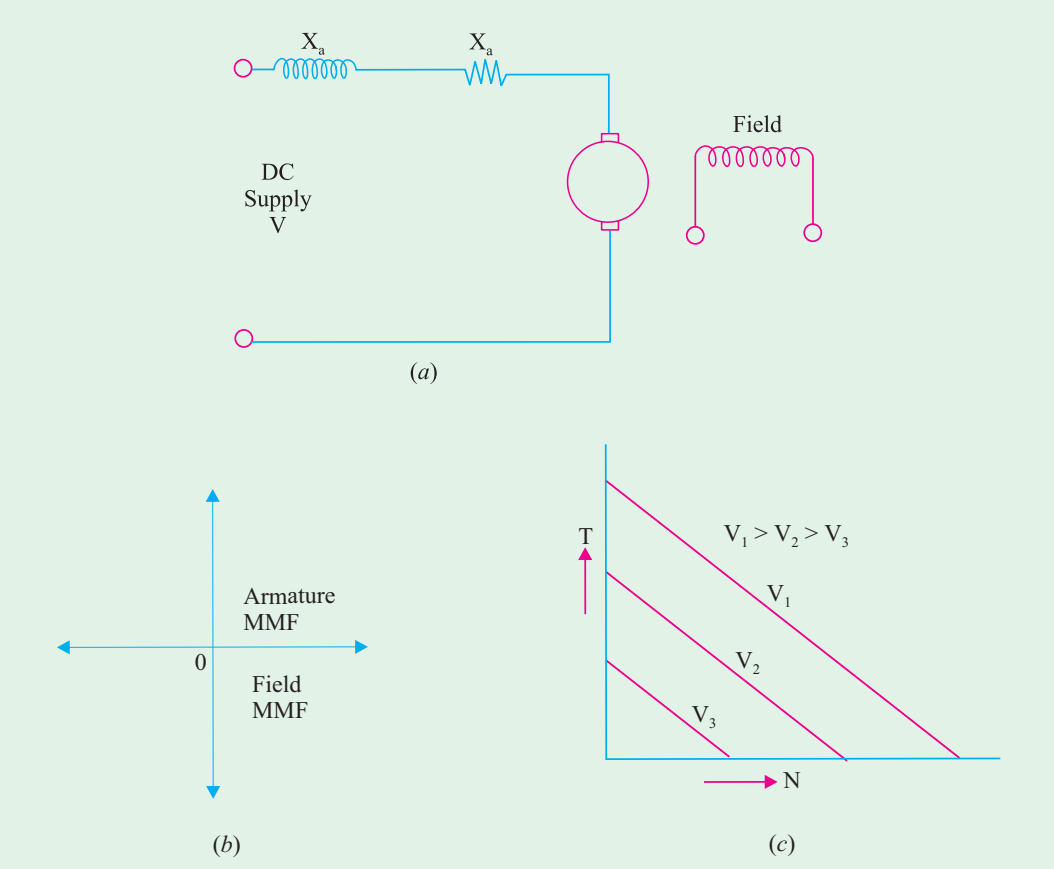


**Fig. 39.26**

As shown in Fig. 39.26 (*b*), the armature m.m.f. and excitation field mmf are in quadrature. This fact provides a fast torque response because torque and flux become decoupled. Accordingly, a step change in the armature voltage or current produces a quick change in the position or speed of the rotor.

Permanent magnet stepper motor

## 39.24. AC Servomotors

Presently, most of the ac servomotors are of the two-phase squirrel-cage induction type and are used for low power applications. However, recently three-phase induction motors have been modified for high power servo systems which had so far been using high power d.c. servomotors.

### (*a*) Two-phase AC Servomotor

Such motors normally run on a frequency of 60 Hz or 400 Hz (for airborne systems). The stator has two distributed windings which are displaced from each other by 90° (electrical). The main

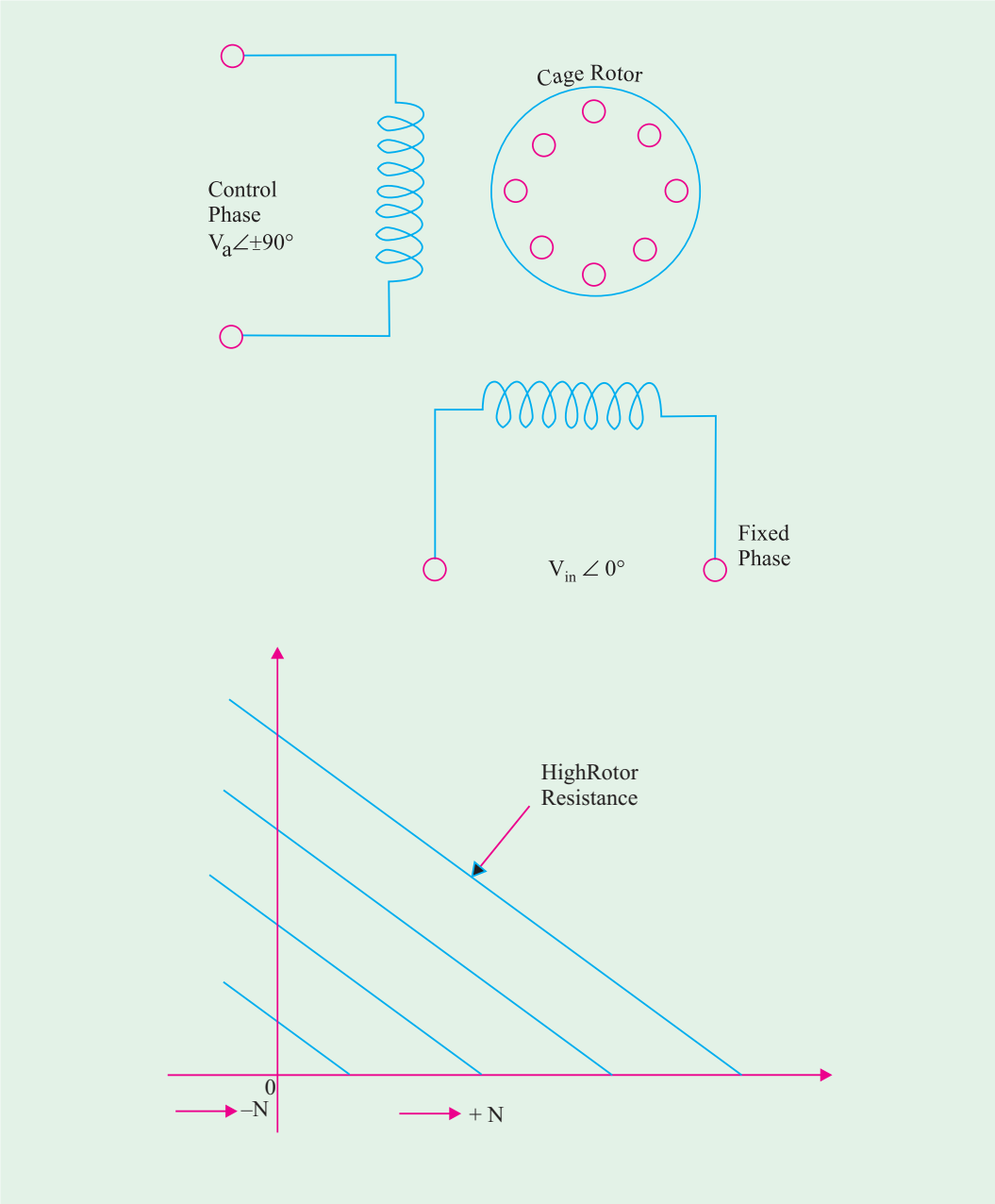


**Fig. 39.27**

winding (also called the reference or fixed phase) is supplied from a constant voltage source, $V_m \angle 0°$ (Fig. 39.27). The other winding (also called the control phase) is supplied with a variable voltage of the same frequency as the reference phase but is phase-displaced by 90º (electrical). The control-phase voltage is controlled by an electronic controller. The speed and torque of the rotor are controlled by the phase difference between the main and control windings. Reversing the phase difference from leading to lagging (or ***vice-versa***) reverses the motor direction.

Since the rotor bars have high resistance, the torque-speed characteristics for various armature voltages are almost linear over a wide speed range particularly near the zero speed. The motor operation can be controlled by varying the voltage of the main phase while keeping that of the reference phase constant.

### (*b*) Three-phase AC Servomotors

A great deal of research has been to modify a three-phase squirrel-cage induction motor for use in high power servo systems. Normally, such a motor is a highly non-linear coupled-circuit device. Recently, this machine has been operated successfully as a linear decoupled machine (like a d.c. machine) by using a control method called vector control or field oriented control. In this method, the currents fed to the machine are controlled in such a way that its torque and flux become decoupled as in a dc machine. This results in a high speed and a high torque response.

## OBJECTIVE TESTS – 39

**1.** A single-stack, 4-phase, 6-pole VR stepper motor will have a step angle of
(*a*) 15º
(*b*) 30º
(*c*) 45º
(*d*) 90º

**2.** In a three-stack 12/8-pole VR motor, the rotor pole pitch is
(*a*) 15º
(*b*) 30º
(*c*) 45º
(*d*) 60º

**3.** A three-stack VR stepper motor has a step angle of 10º. What is the number of rotor teeth in each stack ?
(*a*) 36
(*b*) 24
(*c*) 18
(*d*) 12

**4.** If a hybrid stepper motor has a rotor pitch of 36º and a step angle of 9º, the number of its phases must be
(*a*) 4
(*b*) 2
(*c*) 3
(*d*) 6

**5.** What is the step angle of a permanent-magnet stepper motor having 8 stator poles and 4 rotor poles ?
(*a*) 60º
(*b*) 45º
(*c*) 30º
(*d*) 15º

**6.** A stepping motor is a ..... device.
(*a*) mechanical
(*b*) electrical
(*c*) analogue
(*d*) incremental

**7.** Operation of stepping motors at high speeds is referred to as
(*a*) fast forward
(*b*) slewing
(*c*) inching
(*d*) jogging

**8.** Which of the following phase switching sequence represents half-step operation of a VR stepper motor ?
(*a*) A, B, C, A .....
(*b*) A, C, B, A .....
(*c*) AB, BC, CA, AB .....
(*d*) A, AB, B, BC .....

**9.** The rotational speed of a given stepper motor is determined solely by the
(*a*) shaft load
(*b*) step pulse frequency
(*c*) polarity of stator current
(*d*) magnitude of stator current.

**10.** A stepper motor may be considered as a ..... converter.
(*a*) dc to dc
(*b*) ac to ac
(*c*) dc to ac
(*d*) digital-to-analogue

**11.** The rotor of a stepper motor has no

(*a*) windings
(*b*) commutator
(*c*) brushes
(*d*) all of the above.

**12.** Wave excitation of a stepper motor results in
(*a*) microstepping
(*b*) half-stepping
(*c*) increased step angle
(*d*) reduced resolution.

**13.** A stepper motor having a resolution of 300 steps/rev and running at 2400 rpm has a pulse rate of— pps.
(*a*) 4000
(*b*) 8000
(*c*) 6000
(*d*) 10,000

**14.** The torque exerted by the rotor magnetic field of a PM stepping motor with unexcited stator is called .....torque.
(*a*) reluctance
(*b*) detent
(*c*) holding
(*d*) either (*b*) or (*c*)

**15.** A variable reluctance stepper motor is constructed of ..... material with salient poles.
(*a*) paramagnetic
(*b*) ferromagnetic
(*c*) diamagnetic
(*d*) non-magnetic

**16.** Though structurally similar to a control transmitter, a control receiver differs from it in the following way :
(*a*) it has three-phase stator winding
(*b*) it has a rotor of dumbell construction
(*c*) it has a mechanical damper on its shaft
(*d*) it has single-phase rotor excitation.

**17.** The control ..... synchro has three-phase winding both on its stator and rotor.
(*a*) differential
(*b*) transformer
(*c*) receiver
(*d*) transmitter

**18.** Regarding voltages induced in the three stator windings of a synchro, which statement is false ?
(*a*) they depend on rotor position.
(*b*) they are in phase.
(*c*) they differ in magnitude.
(*d*) they are polyphase voltages.

**19.** The low-torque synchros cannot be used for
(*a*) torque transmission
(*b*) error detection
(*c*) instrument servos
(*d*) robot arm positioning.

**20.** Which of the following synchros are used for error detection in a servo control system ?
(*a*) control transmitter
(*b*) control transformer
(*c*) control receiver
(*d*) both (*a*) and (*b*).

**21.** For torque transmission over a long distance with the help of electrical wires only, which of the following two synchros are used ?
(*a*) *CX* and *CT*
(*b*) *CX* and *CR*
(*c*) *CX* and *CD*
(*d*) *CT* and *CD*.

**22.** The arrangement required for producing a rotation equal to the sum or difference of the rotation of two shafts consists of the following coupled synchros.
(*a*) control transmitter
(*b*) control receiver
(*c*) control differential transmitter
(*d*) all of the above.

**23.** Which of the following motor would suit applications where constant speed is absolutely essential to ensure a consistent product ?
(*a*) brushless dc motor
(*b*) disk motor
(*c*) permanent-magnet synchronous motor
(*d*) stepper motor.

**24.** A switched reluctance motor differs from a *VR* stepper motor in the sense that it
(*a*) has rotor poles of ferromagnetic material
(*b*) rotates continuously
(*c*) is designed for open-loop operation only
(*d*) has lower efficiency.

**25.** The electrical displacement between the two stator windings of a resolver is
(*a*) 120°
(*b*) 90°
(*c*) 60°
(*d*) 45°.

**26.** Which of the following motor runs from a low dc supply and has permanently magnetized salient poles on its rotor ?

(*a*) permanent-magnet d.c. motor

(*b*) disk d.c. motor

(*c*) permanent-magnet synchronous motor

(*d*) brushless d.c. motor.

**27.** A dc servomotor is similar to a regular d.c. motor except that its design is modified to cope with

(*a*) electronic switching

(*b*) slow speeds

(*c*) static conditions

(*d*) both (*b*) and (*c*).

**28.** One of the basic requirements of a servomotor is that it must produce high torque at all

(*a*) loads

(*b*) frequencies

(*c*) speeds

(*d*) voltages.

**29.** The most common two-phase ac servomotor differs from the standard ac induction motor because it has

(*a*) higher rotor resistance

(*b*) higher power rating

(*c*) motor stator windings

(*d*) greater inertia.

**30.** Squirrel-cage induction motor is finding increasing application in high-power servo systems because new methods have been found to

(*a*) increase its rotor resistance

(*b*) control its torque

(*c*) decrease its intertia

(*d*) decouple its torque and flux.

## ANSWERS

**1.** *a* **2.** *c* **3.** *d* **4.** *a* **5.** *b* **6.** *d* **7.** *b* **8.** *d* **9.** *b* **10.** *d* **11.** *d* **12.** *b* **13.** *c* **14.** *d* **15.** *b* **16.** *c* **17.** *a* **18.** *d* **19.** *d* **20.** *d* **21.** *b* **22.** *d* **23.** *c* **24.** *b* **25.** *b* **26.** *a* **27.** *d* **28.** *c* **29.** *a* **30.** *d*.

## QUESTIONS AND ANSWERS ON SPECIAL MACHINES

**Q.1. Do stepper motors have internal or external fans ?**

**Ans.** No. Because the heat generated in the stator winding is conducted through the stator iron to the case which is cooled by natural conduction, convection and radiation.

**Q.2. Why do hybrid stepping motors have many phases sometime more than six ?**

**Ans.** In order to obtain smaller step angles.

**Q.3. Any disadvantage(s) of having more phases?**

**Ans.** Minor ones are: more leads have to be brought out from the motor, more interconnections are required to the drive circuit and more switching devices are needed.

**Q.4. What is the main attraction of a multi-stack *VR* stepper motor ?**

**Ans.** It is well-suited to high stepping rates.

**Q.5. You are given a *VR* motor and a hybrid stepper motor which look exactly similar. How would you tell which is which ?**

**Ans.** Spin the rotor after short-circuiting the stator winding. If there is no mechanical resistance to rotation, it is a *VR* motor and if there is resistance, then it is a hybrid motor.

**Q.6. How do you explain it ?**

**Ans.** Since *VR* motor has magnetically neutral rotor, it will not induce any e.m.f. in the short-circuited winding *i.e.* the machine will not act as a generator and hence experience no drag on its rotation. However, the rotor of a hybrid motor has magnetic poles, hence it will act as a generator and so experience a drag.

**Q.7. Will there be any harm if the rotor of a hybrid stepper motor is pulled out of its stator ?**

**Ans.** Yes. The rotor will probably become partially demagnetized and, on reassembling, will give less holding torque.

GO To FIRST