Electrical Shop Practice
EE-2200

Installing Branch Circuits

Course Teachers

1. Prof. Dr. Md. Abdur Rafiq
&
2. Md. Jahirul Islam

What are Wiring Boxes?

- hold cable or conduit and protect connections
- attached to building
- contain all electrical connections not in fixtures
- rectangular or octagonal
- various depths
- some have removeable sides for expansion
- must be fastened securely to building

What are Wiring Boxes?

- cable clamped to box
- secure cable
- grounded if metal
- wires must be soldered or use wire nuts
- no more than one wire to each screw of receptacle
- positive wires attach to yellow screws, neutral wires to white screws, ground wires to green screws

What are Wiring Boxes?

- when a white wire is used as positive, paint black or use black tape
- four wires per standard box (not counting ground wires)
- duplex receptacle may be on two circuits by breaking metal tab

- **A. Remember**
- 1. Romex: three wire cable
- 2. SEP: Service Entrance Panel
- 3. Black Wire: Hot
- 4. White Wire: Neutral
- 5. Bare or Copper Wire: Ground

Light Wiring Concepts

- always begin at the SEP
- Black or Hot wire comes out of SEP, goes to the switch
- Black wire leave switch, goes to light
- White wire leaves light, returns to SEP

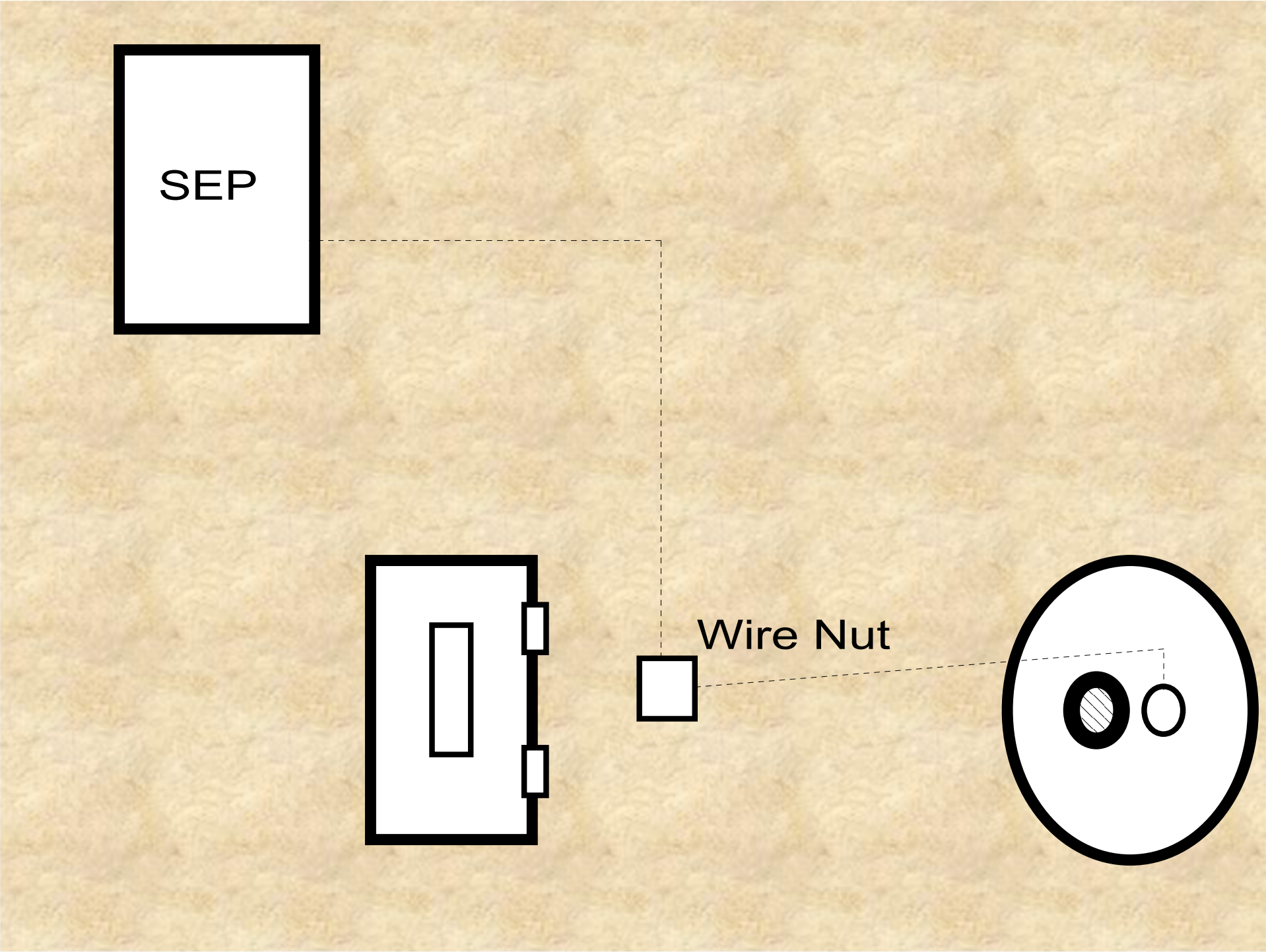
SEP
Wire Nut

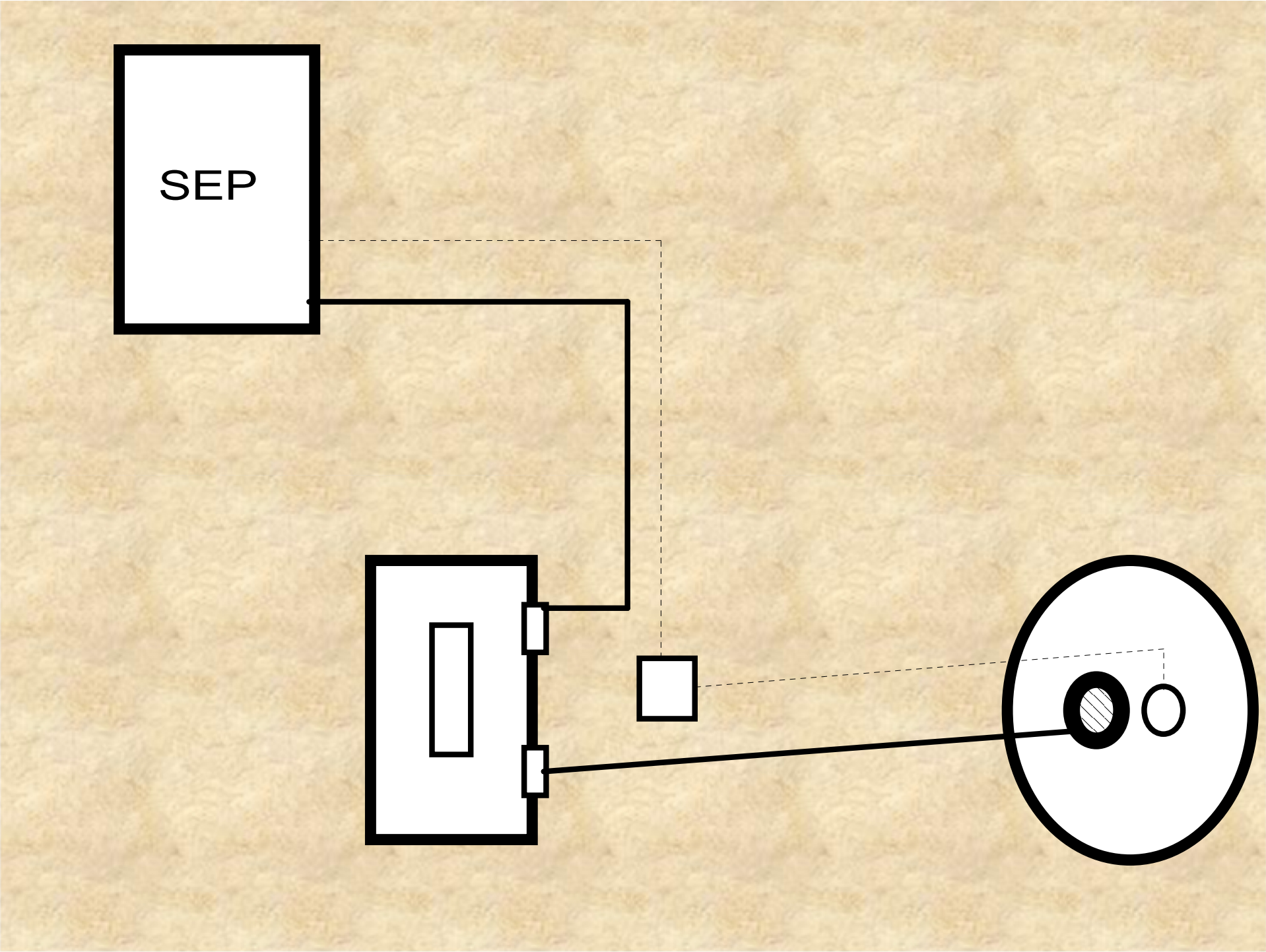
SEP

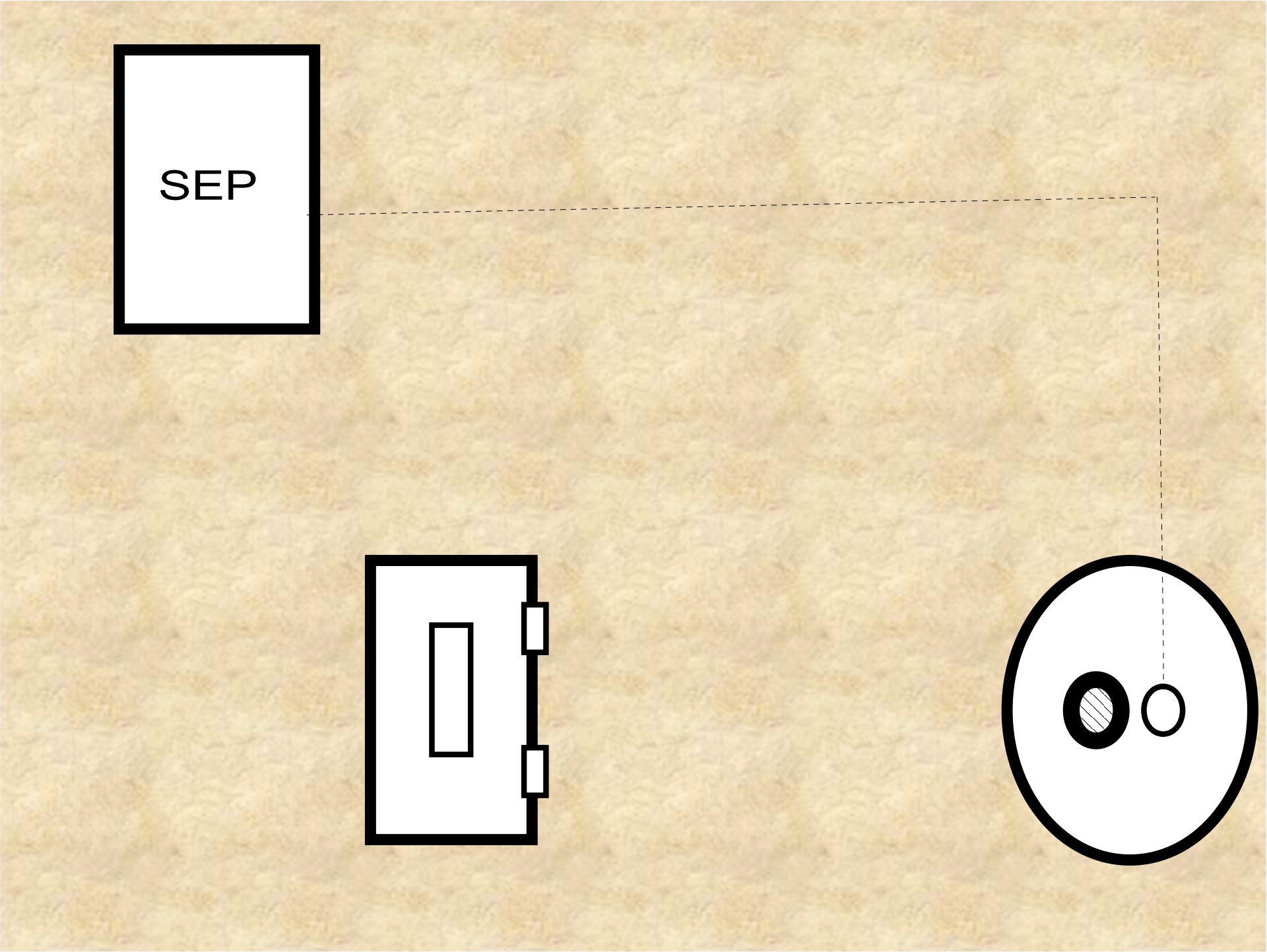
SEP

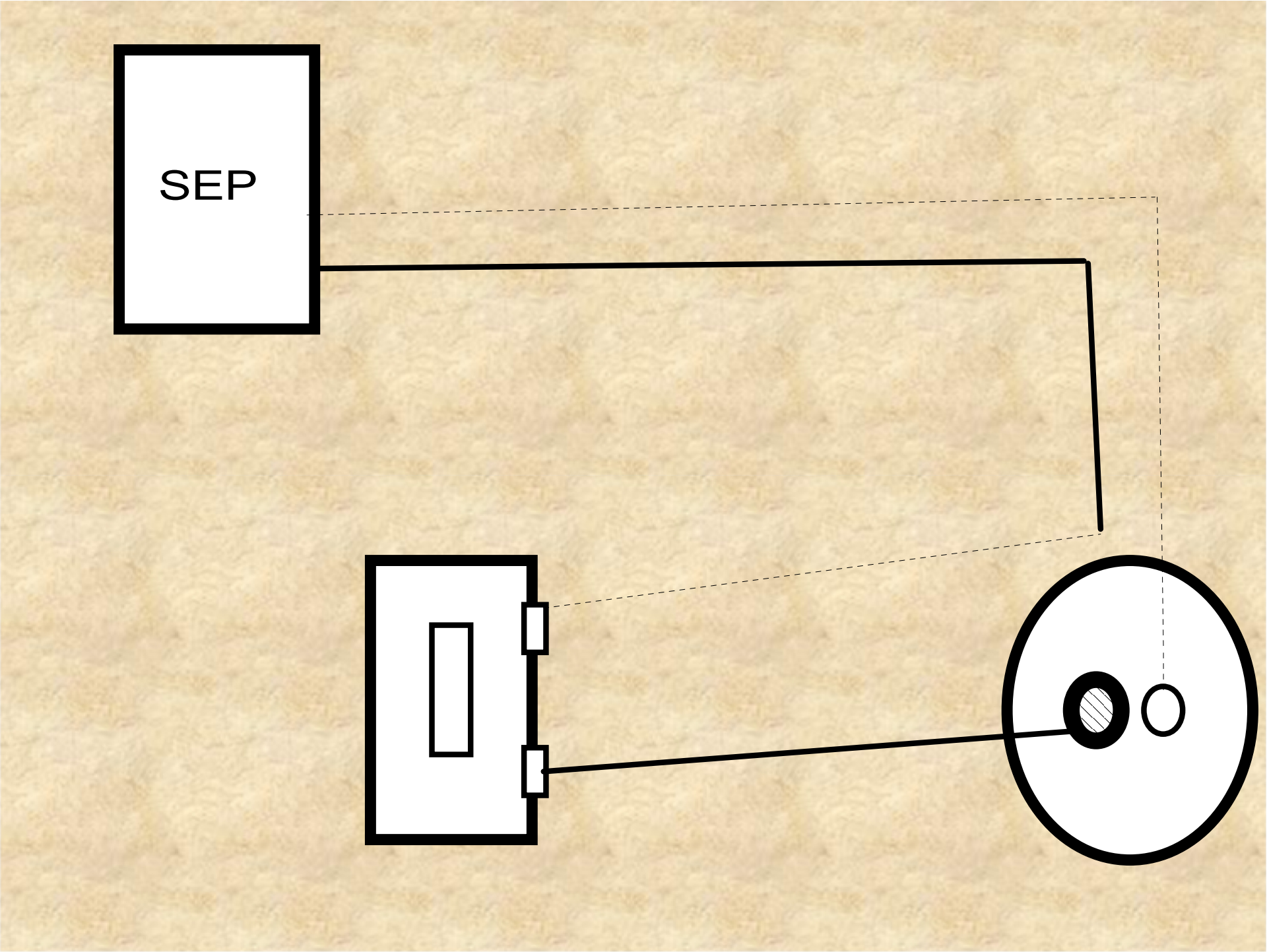
SEP

Three-Way Switch

- used in pairs
- control from two different locations
- 3 terminals (screws)
- current (black wire) feeds into **Common Terminal** (dark screw)
- current flows out of other two screws through **Traveller Wires** to other 3-way switch

Three-Way Switch

- current flows out of other switch from the **Common Terminal**
- current flows to light or receptacle

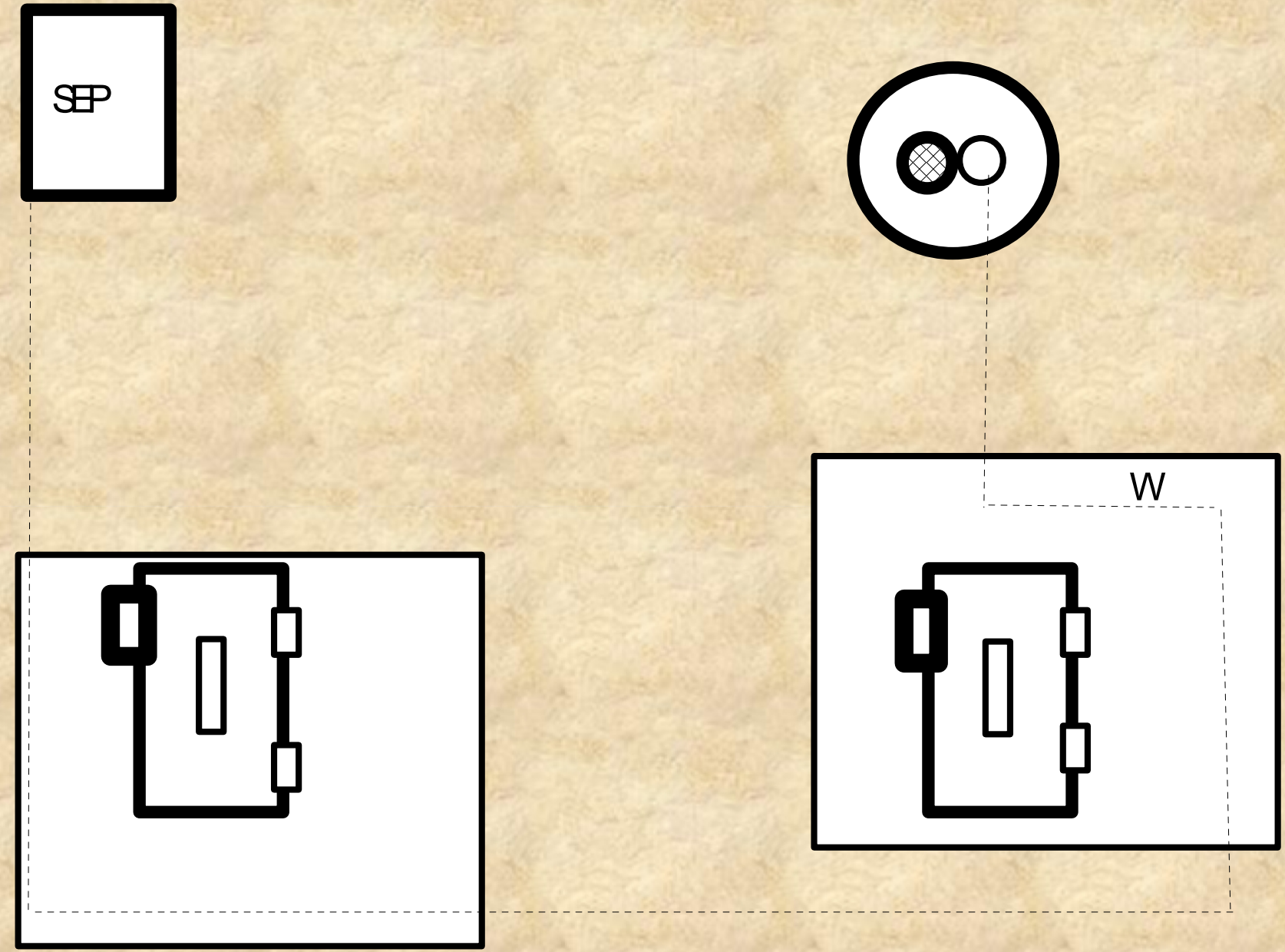
SEP
W

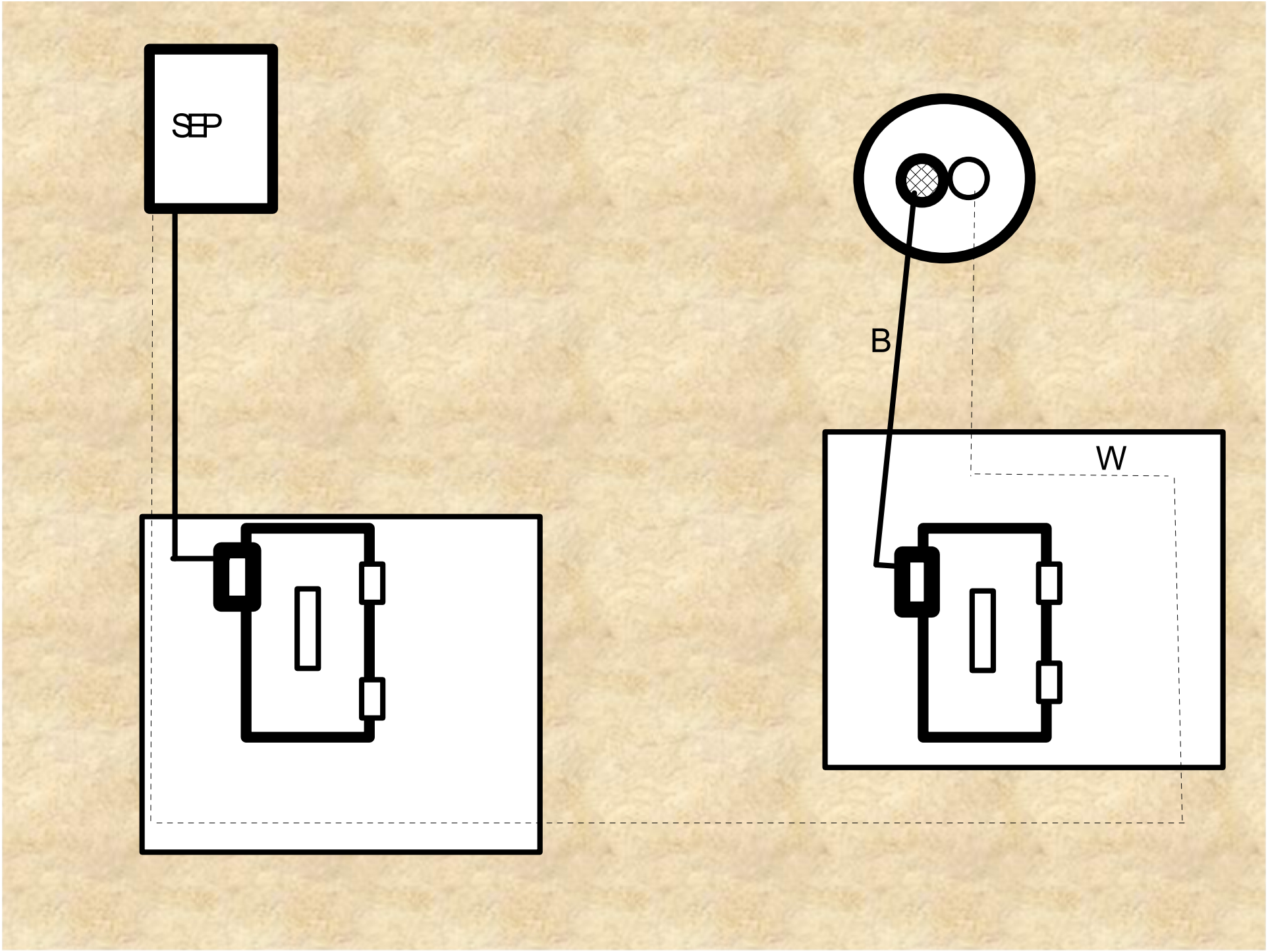
SEP
B
W

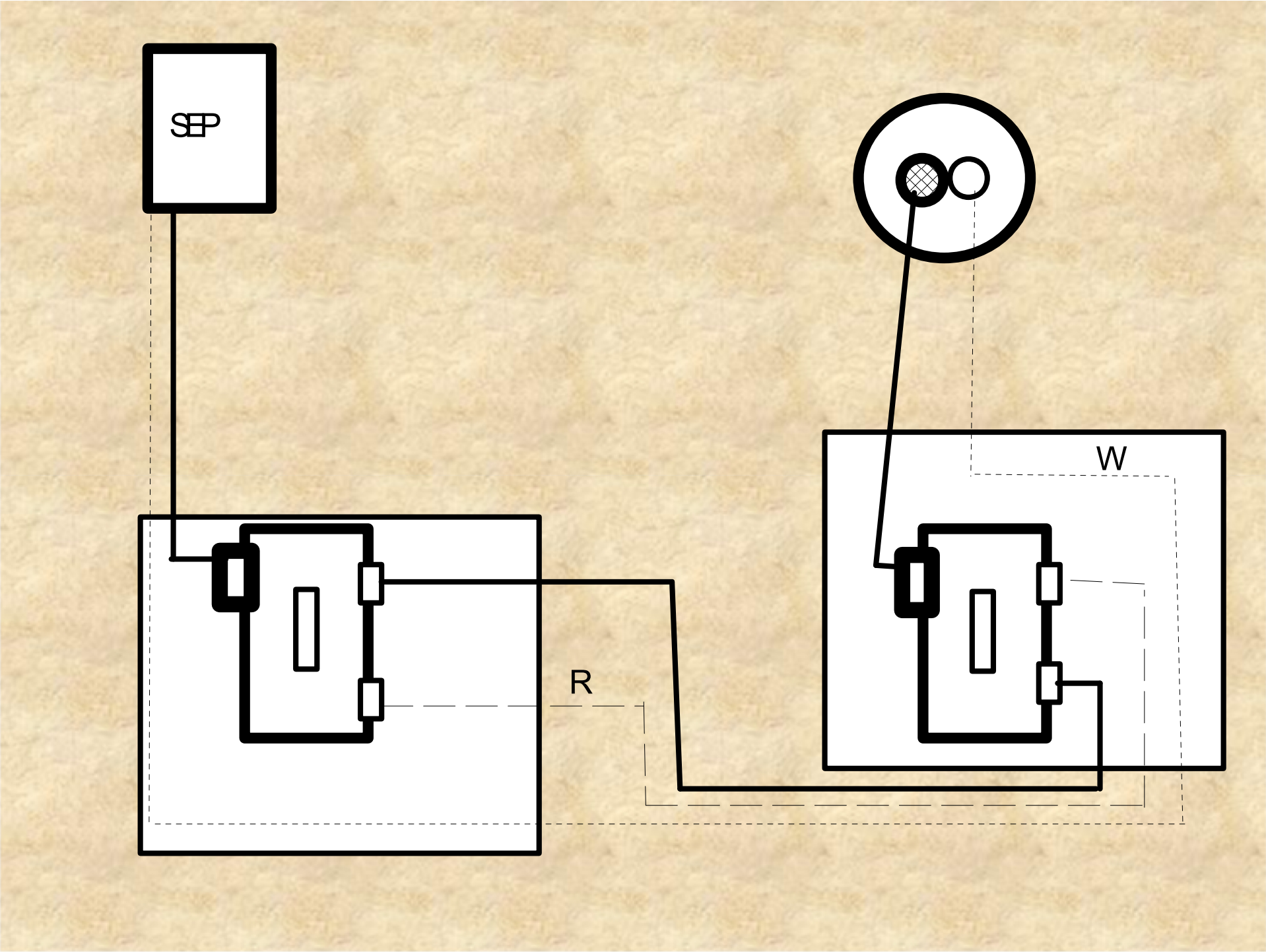
SEP
R
W

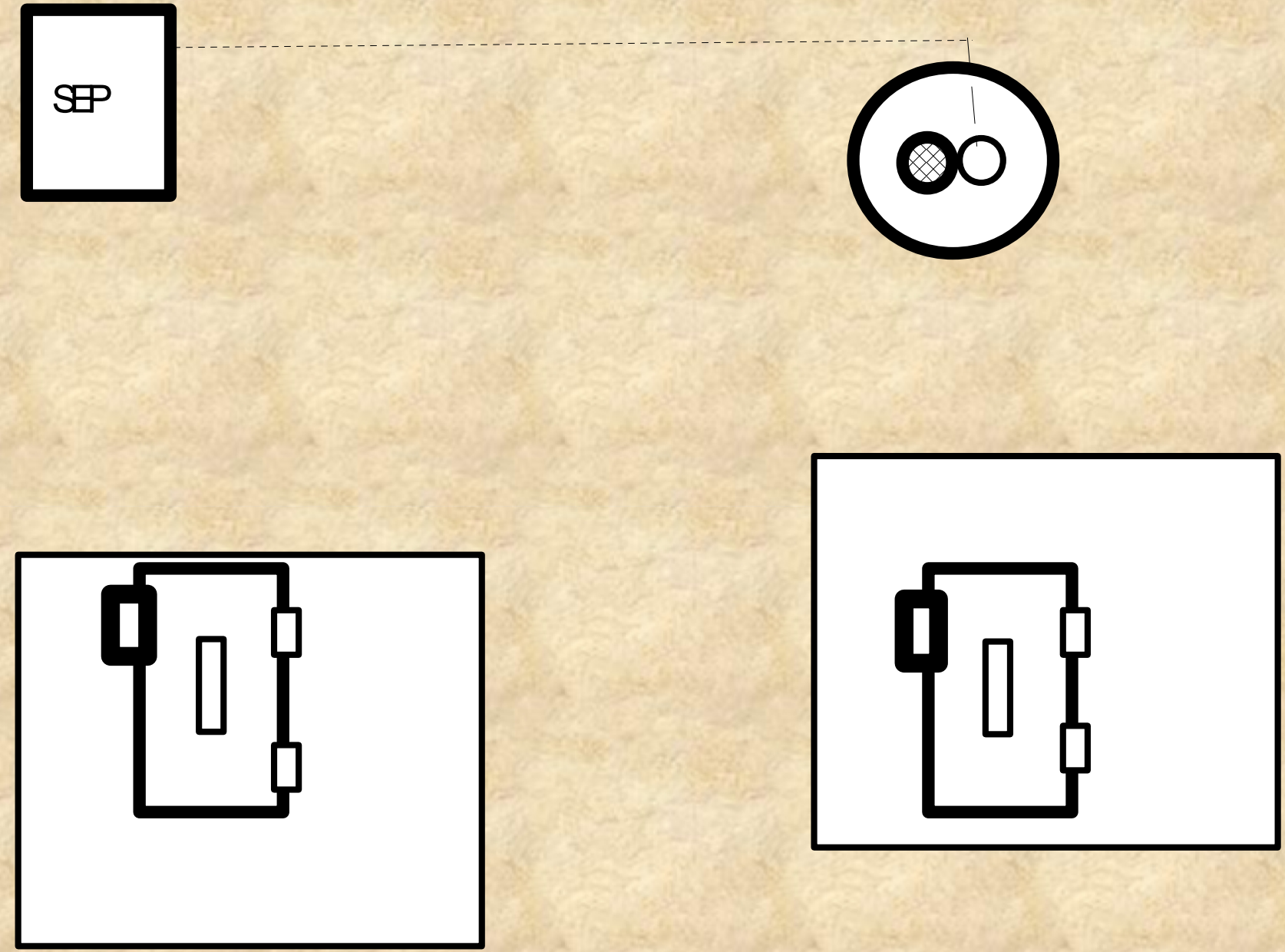
SEP

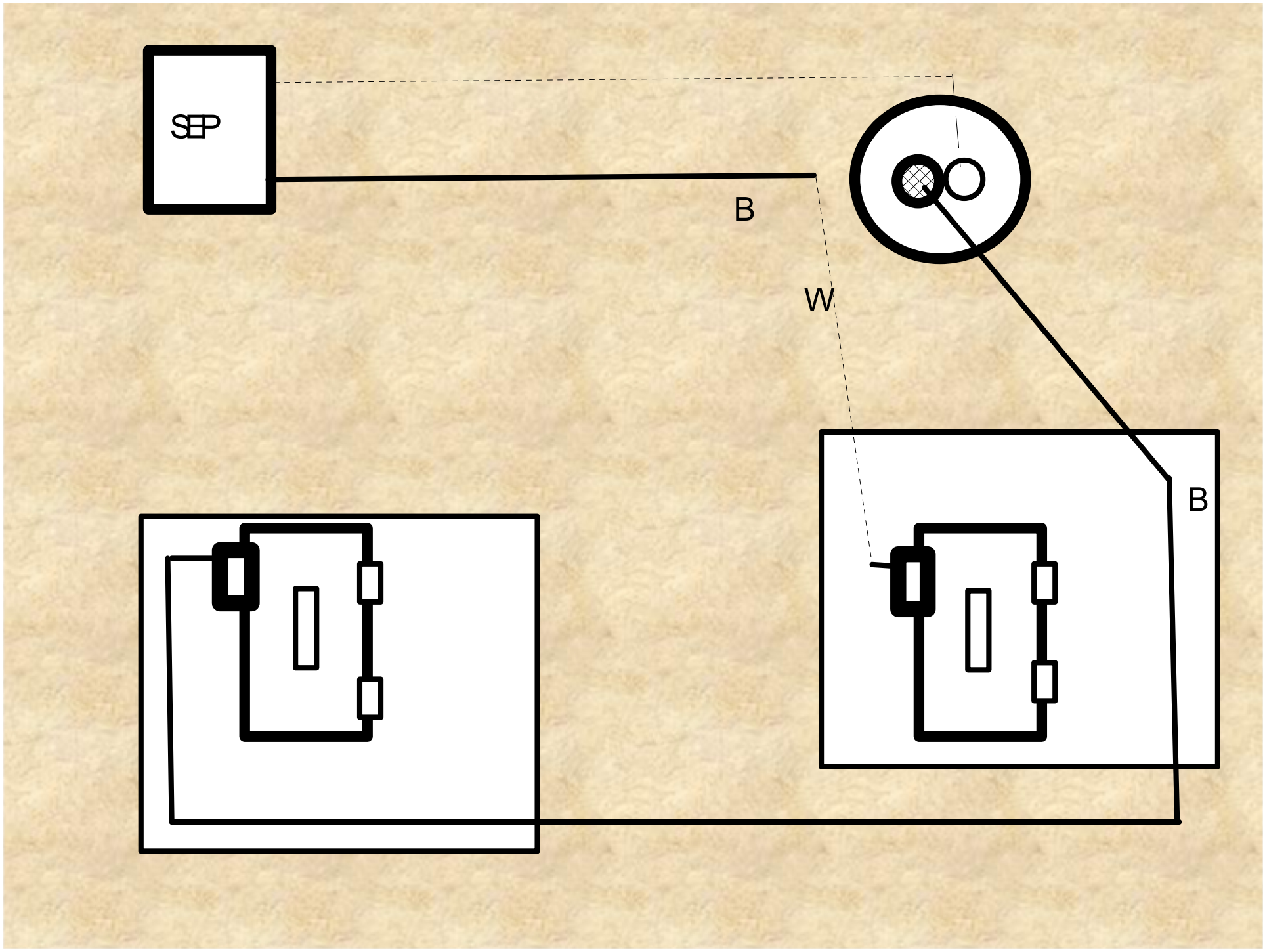
SEP
B
W
B

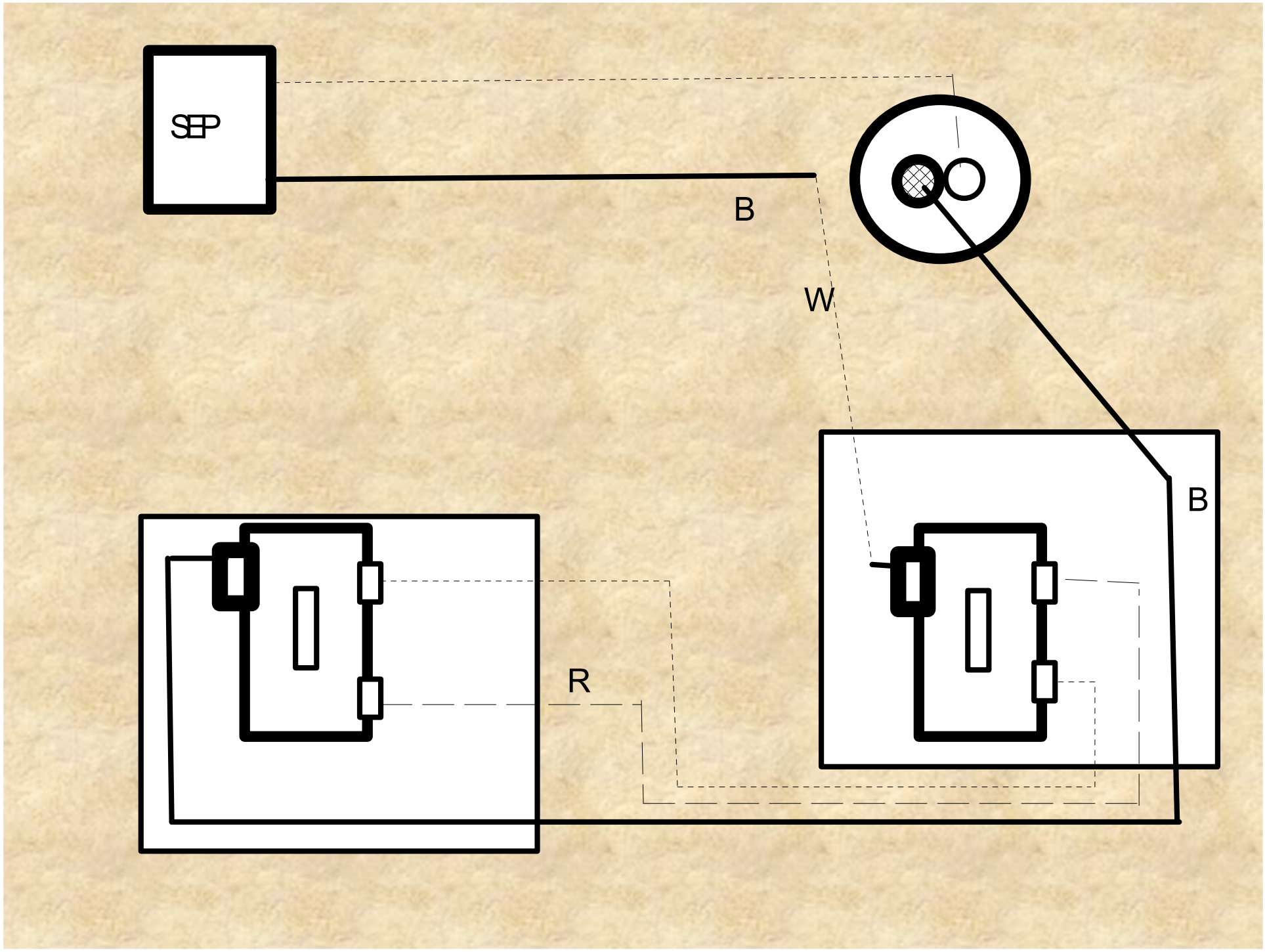
SEP
B
W
B
R

Four-Way Switch

- Used in combination with two three-way switches
- Light can be controlled from any number of locations (more than two)
- Four terminals (screws)
- Depending on style, wires enter from two side screws or two top screws, and leave from the opposite

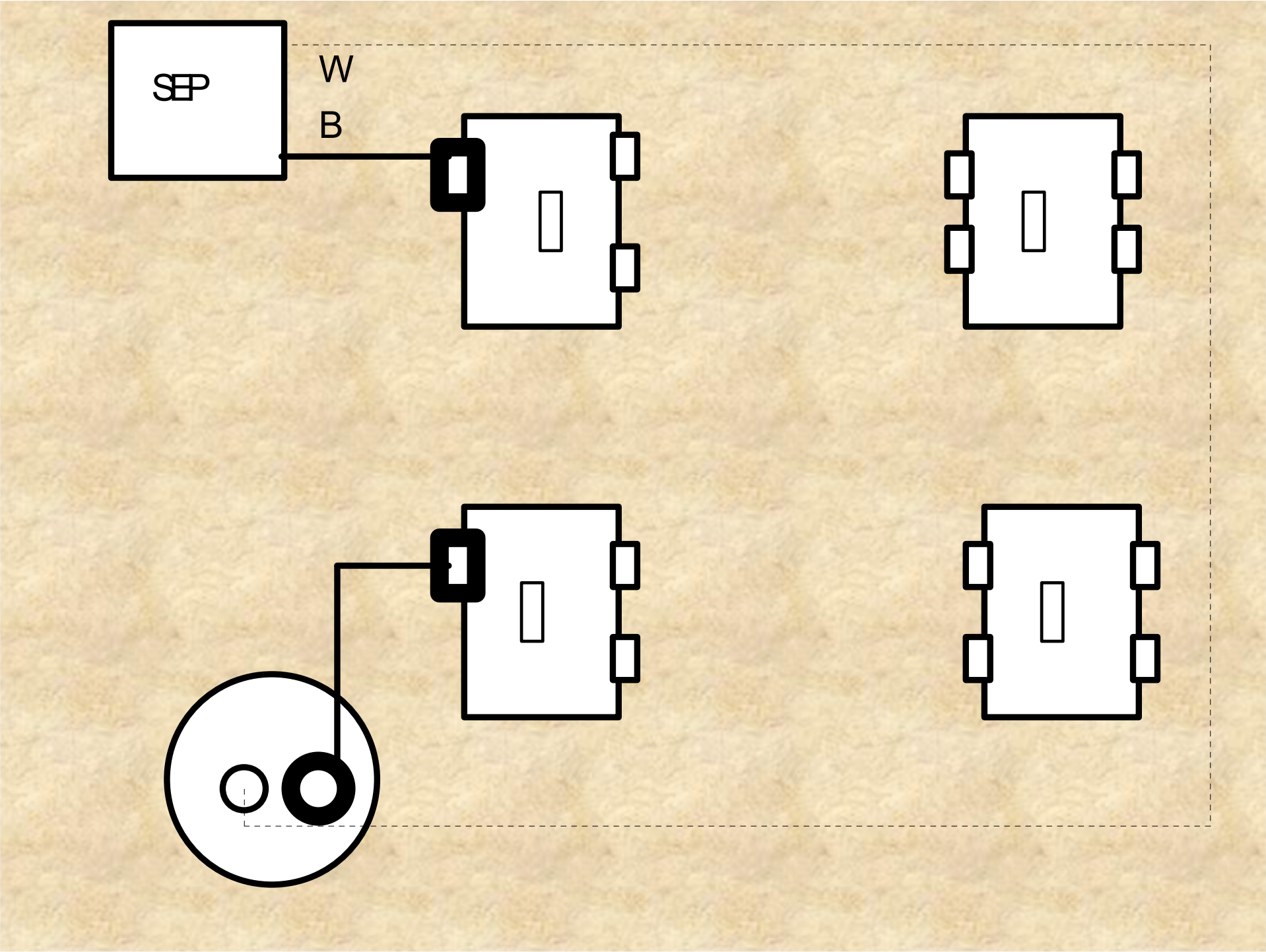
SEP
W
B

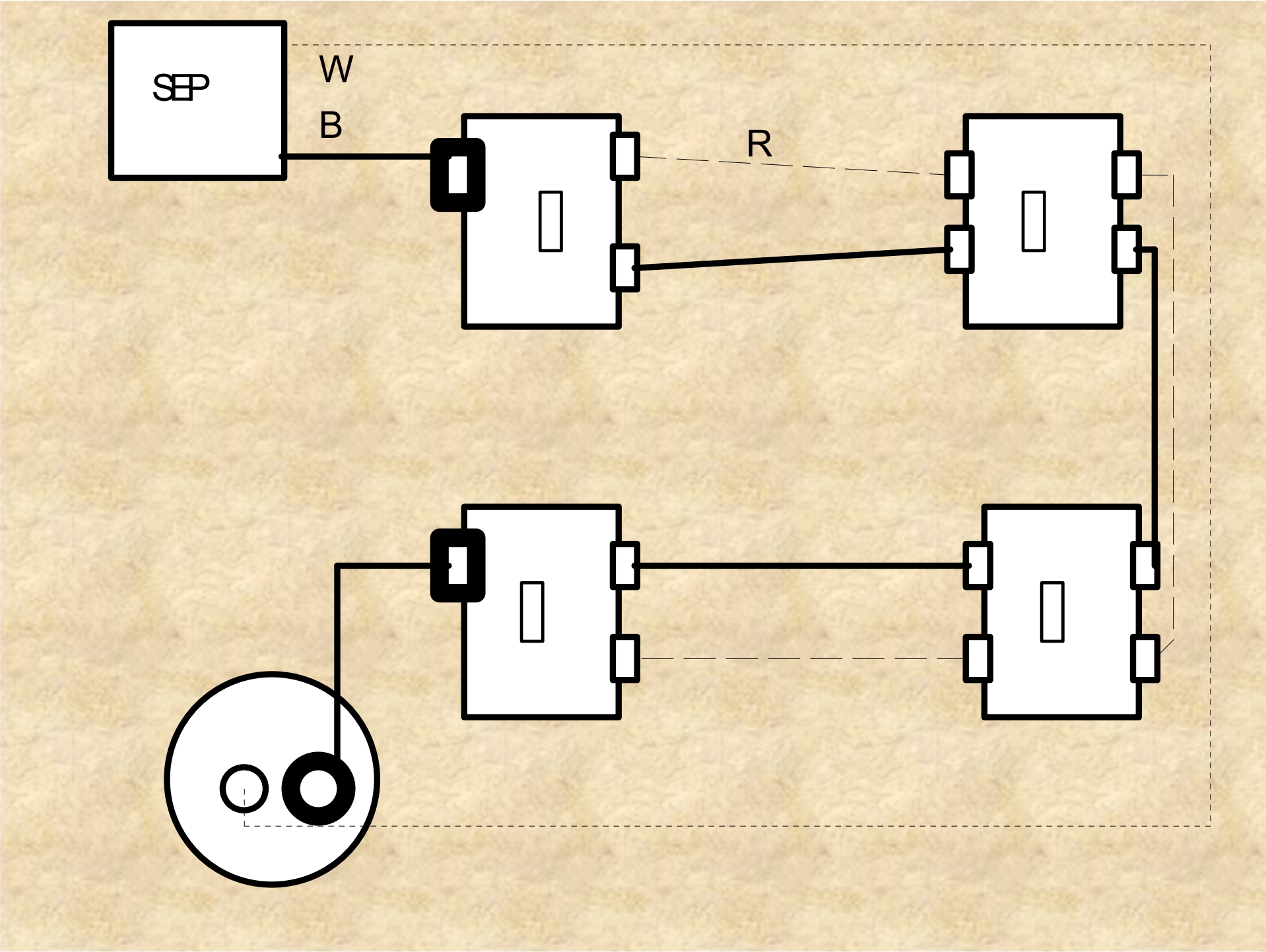
SEP
W
B
R

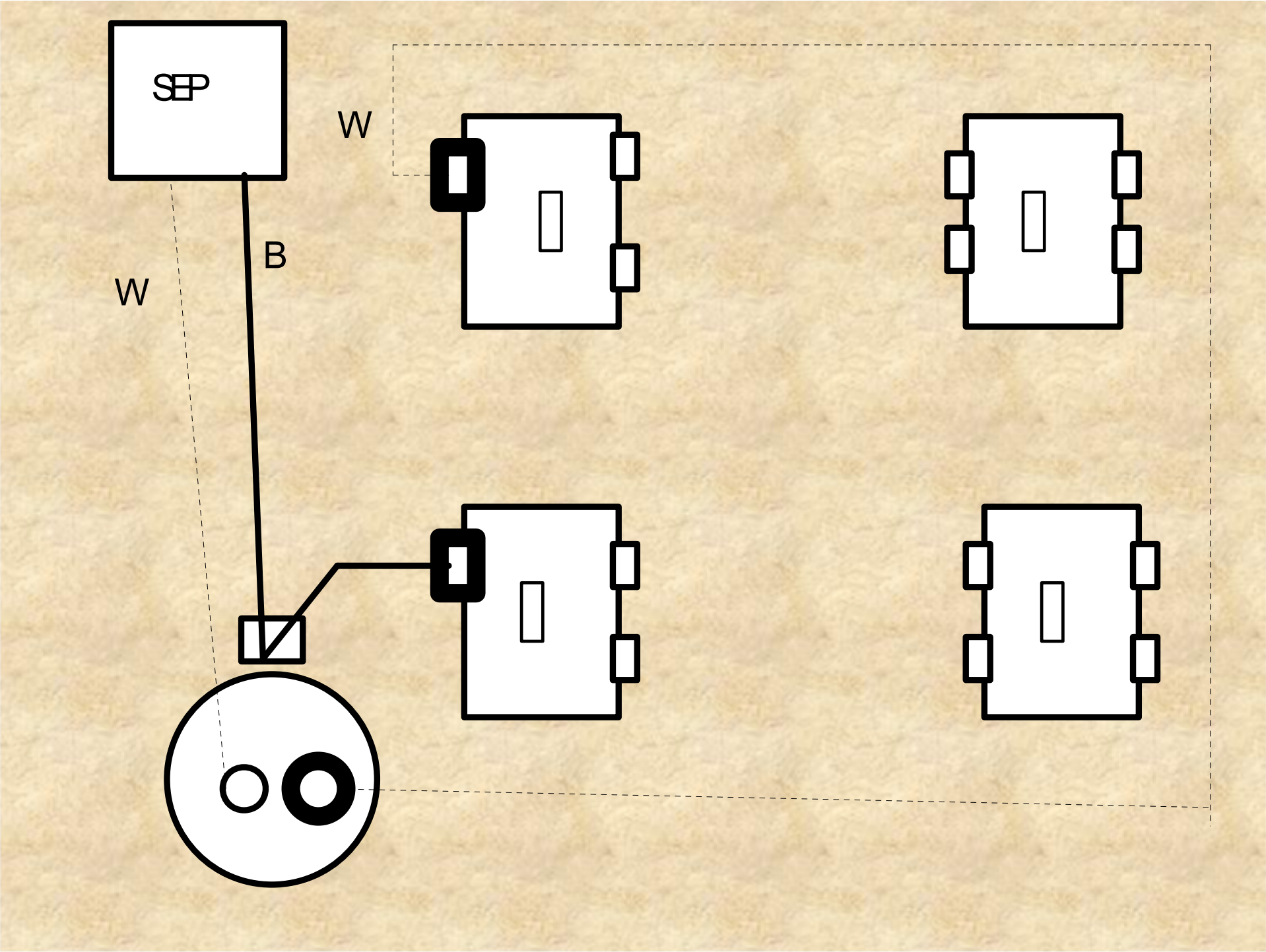
SEP
W
B
W

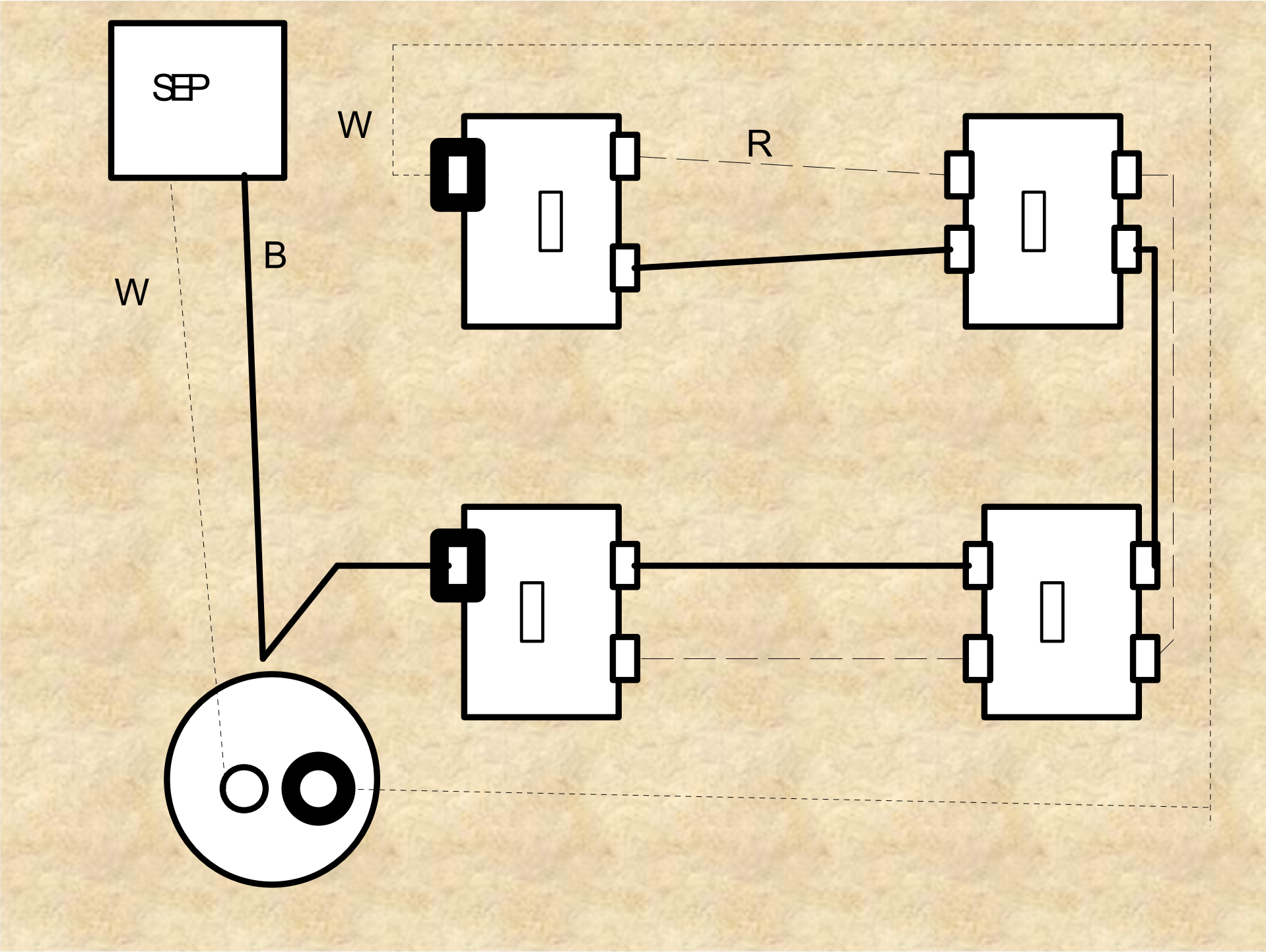
SEP
W
R
B
W